UNITED STATES DEPARTMENT OF AGRICULTURE
Rural Utilities Service

RUS BULLETIN 1728F-806

SUBJECT: **Specifications and Drawings for Underground Electric Distribution**

TO: RUS Electric Staff
RUS Electric Borrowers

DATES:
Effective Date: October 11, 2018
Incorporation by Reference: IBR approved by Director, Office of the *Federal Register* - 2018.

OFFICE OF PRIMARY INTEREST: Electric Staff Division

FILING INSTRUCTION: This bulletin replaces RUS Bulletin 1728F-806, Specifications and Drawing for Underground Electric Distribution, dated June 2000.

PURPOSE: This bulletin contains complete specifications settings forth the RUS requirements for constructing rural underground electric distribution systems using state-of-the-art materials, equipment, and construction methods. This information is incorporated by reference in 7 CFR Part 1728.

For Christopher A. McLean
Assistant Administrator, Electric Program

10/11/18
Date

TABLE OF CONTENTS

1	General	4
2	Storage of Material and Equipment	5
3	Handling of Cable	5
4	Plowing	6
5	Special Requirements for Coordination Between Owner and Contractor Where Cable is to be Installed by Plowing	7
6	Trenching	7
7	Installing Cable in Trench	8
8	Installing Cable by Directional Bore	9
9	Minimum Bending Radius of Cable	9
10	Conduit	9
11	Tagging of Cables at Termination Points	10
12	Joints/Splices	10
13	Primary Cable Termination and Stress Cones	10
14	Special Precautions for Cable Joints/Splices and Terminations	11
15	Secondary and Service Connections	11
16	Pedestals	12
17	Inspection and Inventory of Buried Units	12
18	Backfilling	12
19	Equipment Pads	13
20	Transformers	13
21	Below Grade Enclosures	13
22	Utility Safety Signs	13
23	Sacrificial Anodes	14
24	Grounding	14
25	Cable Route Location Markers	14
26	Installed Cable and Acceptance Tests	14
27	Placement of Surge Arresters	15

Attachments

Attachment A - Drawing Descriptions
Attachment B - Construction Drawings
Attachment C - RUS Standard Format and Meaning of Underground Distribution Assembly Numbers

INDEX:

ASSEMBLIES
Underground Distribution – Bul. 1728F-806

SPECIFICATIONS AND STANDARDS:
Construction Specifications and Drawings – Bul. 1728F-806
Underground Distribution – Bul. 1728F-806

UNDERGROUND DISTRIBUTION:
Underground Rural Distribution – Bul. 1728F-806

ABBREVIATIONS

ANSI – American National Standards Institute
IEEE - Institute of Electrical and Electronic Engineers, Inc.
NEMA - National Electrical Manufacturers Association
NESC - Compliance with National Electrical Safety Code
NRECA – National Rural Electric Cooperative Association

1 GENERAL

a These specifications provide for the construction of underground distribution power facilities as specified by the owner. The owner is defined as the organization contracting for the services and when used in connection with RUS financed facilities, is synonymous with the term borrower as defined in ~1710.2.

b It is the responsibility of the owner to ensure that all construction work shall be accomplished in a thorough and workmanship manner in accordance with the staking sheets, plans and specifications, and the construction drawings.

c If construction work is performed by the Owner's force labor account crews instead of a contractor, any reference to "Contractor" in the narrative portions or drawings of this bulletin shall also apply to the force labor account crews.

d The provisions of 7 CFR 1724.50, Compliance with National Electrical Safety Code (NESC) applies to all borrower electric system facilities regardless of the source of financing.

(1) The owner shall ensure that its electric system, including all electric distribution, transmission, and generating facilities, is designed, constructed, operated, and maintained in accordance with all applicable provisions of the most current and accepted criteria of the NESC and all applicable and current electrical and safety requirements of any State or local government entity in which they serve. Copies of the NESC may be obtained from the Institute of Electrical and Electronic Engineers, Inc.,

EEE Customer Service
445 Hoes Lane
P.O. Box 1331
Piscataway, NJ 08855-1331
Telephone: (800)678-4333
Web site: http://shop.ieee.org/ieeestore/

(2) This requirement applies to the borrower’s electric system regardless of the source of financing.

(3) Any electrical standard requirement established by RUS are in addition to, and not in substitution for or a modification of, the most current and accepted criteria of the NESC and any applicable electrical or safety requirement of any State or local governmental entity.

e Overhead distribution design specifications and standards are in RUS Bulletin 1728F-804 and Bulletin 1728F-803. With the underground assemblies attached to the overhead facilities, please note: Overhead distribution circuits shall be constructed with not less than the Grade C strength requirements as described in Section 26, Strength Requirements, of the NESC when subjected to the loads specified in NESC Section 25, Loadings for Grades B and C. Overhead transmission circuits shall be constructed with not less than the Grade B strength requirement as described in NESC Section 26.

f An effective program for identifying underground cable routes is a good mapping system.

g The drawings of equipment and materials shown in the construction assemblies depict the general categories of items found in RUS Informational Publication 202-1, “List of Materials Acceptable for Use on System of RUS Electrification Borrowers” (“List of Material”). Any drawing of any piece of equipment or material that resembles a specific product of a manufacturer is unintentional.

h Owners shall use the new assembly and guide coding system on the new assembly units and guide drawings as listed in the RUS Bulletin 1728F-806. However, owners may elect to continue using the old numbers of these assembly and guide drawings, but only for the previous (dated June 2000 publication) assemblies and guide drawings and their old numbers if they make the applicable material changes to the old assemblies.

2 STORAGE OF MATERIAL AND EQUIPMENT

All material and equipment to be used in construction shall be stored so as to be protected from deteriorating effects of the elements. If outdoor storage cannot be avoided, the material and equipment must be protected from the elements as appropriate, and with due regard to public safety.

3 HANDLING OF CABLE

The cable shall be handled carefully at all times to avoid damage, and shall not be dragged across the ground, fences or sharp projections. This includes setting up utility signs to mark cable laying in a vehicle traffic area to prevent cable damage. Care shall be exercised to avoid excessive bending of the cable. The ends of the cable shall be sealed at all times against moisture with suitable end caps. Where it is necessary to cut the cable, the ends will be terminated or sealed immediately after the cutting operation.

4 PLOWING

a When cables, flexible conduit, and cable-in-conduit are to be installed by plowing, it is the responsibility of the owner to ensure that the plowing equipment be subject to the approval of the Owner and the public authorities having jurisdiction over highway and road rights-of-way. The plow shall be provided with a means to assure positive hold-down of the plow blade to provide proper depth at all times.

b The design of the plowshare shall ensure that the cable passing through the plow will not be bent in a radius less than 12 times the outside diameter of the cable. The equipment shall be capable of extending the plow a minimum of 6 inches below the specified depth under all terrain conditions of plow utilization.

c The owner shall ensure that equipment and construction methods used during construction cause minimum displacement of the soil. The slot made in the soil by the cable plows shall be closed immediately by driving a vehicle track or wheel over the slot or by other suitable means.

d Starting and terminating points of the plowing operation shall be excavated prior to cable installation to reduce possible cable damage and to assure sufficient burial depth.

e During the plowing operation, care is to be exercised to feed the cable or wire into the ground through the plow loosely and at minimum tension. Besides using proper equipment and construction methods, supervision by the owner or owner’s representative shall be furnished at all times at the site of plowing operations to assure compliance with these specifications.

f If, during the plowing operation, the plow should strike a buried object or rock that would stop the equipment and necessitate removal of the plow from the ground, the plow must be removed from the ground carefully and, if practical, without backing the plow. If it should be necessary to back the plow to remove it from the ground, the cable must be uncovered a sufficient distance back for inspection by the Owner to determine whether the cable or wire has been damaged.

g The cable shall be inspected carefully as it is payed out from the reel to be certain that it is free from visible defects. Every instance of damaged cable observed at any time, whether prior to installation, during installation, or when discovered by test or observation subsequent to installation in plant, shall be immediately called to the attention of the Owner. Repair or correction of such damage shall be done promptly and in accordance with the written instruction of the Owner. The location of any such repair shall be indicated on the staking sheet.

5 SPECIAL REQUIREMENTS FOR COORDINATION BETWEEN OWNER AND CONTRACTOR WHERE CABLE IS TO BE INSTALLED BY PLOWING

a Staking sheets shall be reviewed jointly in the field by the contractor and Owner prior to the start of construction. At that time, the Contractor shall propose any desirable changes or clarifications. These changes, if approved by the Owner, shall be made and recorded on the staking sheets. No changes on the staking sheets shall be made by the Contractor without the prior written approval of the Owner. A representative of the Owner shall remain in the immediate vicinity of the plowing operations at all times and will consider and possibly approve any acceptable changes proposed by the Contractor. A representative of the Owner shall also inspect any damage to cable and approve acceptable methods of repair or correction of such damage in accordance with the provisions of these specifications.

b In the event that rock is encountered during the plowing operation so that the buried cable cannot be installed to the required minimum depths in soil, the Contractor shall determine for the Owner the nature and extent of the rock encountered. Based on this information, the Owner will determine whether the cable is to be rerouted, trenched in rock, protected by conduit or concrete or a change made to aerial construction. This decision shall be made promptly, and appropriate changes in units shall be made on the staking sheets. Such changes shall be in writing, dated, and initialed by the Owner.

c Due to the necessity of making on-the-spot corrections and changes on staking sheets, it may not be possible for the Owner to issue revised staking sheets to the Contractor in all cases. When changes are made, dated, and initialed by the Owner on a set of the Contractor's staking sheets, it shall be the Contractor's responsibility to transfer these changes to all other sets of staking sheets being used by the Contractor for construction purposes.

d The Contractor shall provide a competent representative to work with the Owner on the inventory and inspection of buried cable units. The inventory of buried cable will be made as soon after the plowing operation as practical to avoid later disagreements on the quantity of cable installed when changes are required in the project.

6 TRENCHING

a It is the responsibility of the owner to ensure that all trenching depths specified are listed as minimum as measured from the final grade to the top surface of the cable or conduit. The routing shall be as shown on the staking sheets and plans and specifications unless conditions encountered are such that changes are necessary to accomplish the work. In

such event, the Owner shall be notified promptly. If rock or other difficult digging (i.e. trench caves in) is involved, the Contractor shall determine the nature and extent of the difficulty, and the Owner will determine whether rerouting, rock trenching, plowing, rock sawing or other changes are necessary. Loose soil or crumbly rock shall not be considered as "difficult digging." The trench widths specified are minimums and should be increased as necessary to obtain the required depths in loose soils.

b Where trenches are intended for more than one cable, particular care shall be taken to provide for extra depth and width to allow for soil falling into the trench during the laying of the first cables.

c Care shall be exercised to minimize the likelihood of waterflow since this may cause trench damage and reduction in trench depth. If this occurs, the trench must be cleared to the specified depth before installing the cable.

d All trenches including secondary and service trenches shall follow straight lines between staked points to the greatest extent possible to help in cable locating. The trenches shall be dug so that the bottom has a smooth grade. Large rocks, stones and gravel in excess of l inch shall be removed from the bottom of the trench. Where this cannot be done, a 2 inch bed of sand or clean soil shall be placed in the bottom of the trench.

e Construction shall be arranged so that trenches will be left open for the shortest practical time to avoid creating a hazard to the public and to minimize the likelihood of collapse of the trench due to other construction activity, rain, accumulation of water in the trench, etc.

7 INSTALLING CABLE IN TRENCH

a It is the responsibility of the owner to ensure that the cable shall be placed in the trench as soon after the trenching operation as feasible. Wherever possible, cable shall be payed out from the reel mounted on a moving vehicle or trailer. The reel shall be supported so that it can turn easily without undue strain on the cable. The cable shall be carefully placed in the trench by hand. All cable placements shall be done under constant supervision to be certain that no damage to the cable occurs.

b The cable shall be inspected carefully as it is removed from the reel in laying operations to be certain that it is free from visible defects. The Owner shall decide upon corrective action when defects are discovered.

c Where more than one cable are to be placed in a trench, the spacings required by the specifications must be observed. Care shall be taken that any soil falling into the trench

during the laying of the first cable does not reduce the clearances of the last cable below that specified. Should this occur, the excess soil shall be removed carefully by hand or with equipment so as not to damage the installed cables.

d Sufficient slack, and in no case less than 24 inches, shall be left at all risers, transformer pads, pedestals and terminal points so that movements of cable after backfilling will not cause damaging strain on the cable or terminals. The cable trench shall be mechanically compacted 36 inches minimum from all riser poles, pads, pedestals and terminal points.

e The ends of all secondary cable terminated below ground shall be long enough to reach at least 12 inches above the top of the underground enclosure.

8 INSTALLING CABLE BY DIRECTIONAL BORE

It is the responsibility of the owner to investigate the boring route. If the bore is in public/private right-of-way, a review of the permit is required to determine what type of construction may be required for the installation. During the boring operation, multiple bend/turns should be avoided as it increases the pulling tension on the cable. The cable and or conduits must be handled and or trained with proper guides at the entry and exit points to prevent damage. Procedures for cable handling in trenching and plowing also apply to installation by directional boring.

9 MINIMUM BENDING RADIUS OF CABLE

The minimum bending radius of primary cable is 12 times the overall diameter of the cable. The minimum bending radius of secondary and service cable is six times the overall diameter of the cable. In all cases the minimum radius specified is measured to the surface of the cable on the inside of the bend. No cable bends shall be made within 6 inches of a cable terminal base.

10 CONDUIT

a Cable Protection shall have all exposed ends of the conduit plugged during construction to prevent the entrance of foreign matter and moisture into the conduit. Burrs or sharp projections which might injure the cable shall be removed. Conduits shall be sized to meet the fill limits based on the number and size of cables to be installed. Lubricants used in the aid of cable pulling shall be compatible with both the conduit and cable.

b Direct Buried Riser shield or conduit shall extend at least 18 inches below grade at all riser poles. If full round conduit is used as a riser shield, an end bell shall be installed on the lower end to prevent damage to the cable. Any aluminum portion of the riser shall not be placed below grade.

c Three Phase Riser Guide conduit provides good protection when all three phases are in one conduit. The advantage of each phase in a separate conduit is having improved reliability and lower cable pulling tensions. However, the disadvantages has the separated phase and neutral currents causing induced current in magnetic metal conduits leading to increases in line losses which develops heat that can damage the cable insulation.

D It is the responsibility of the owner to perform cable pulling calculations prior to pulling through a conduit system so that maximum cable tensions are not exceeded. When pulling conductors into a conduit system, the owners shall lubricate cable as needed to reduce pulling tensions.

11 TAGGING OF CABLES AT TERMINATION POINTS

As the cables are laid, it is the responsibility of the owner to ensure that they are identified and tagged. The identification shall be of a permanent type, such as that done on plastic or corrosion resistant metal tags. The tag shall be securely attached to the cable. Paper or cloth tags are not acceptable.

12 JOINTS/SPLICES

a Cable joints/splices shall be of the pre-molded rubber, heat-shrink, or cold-shrink type, of the correct voltage rating and shall be installed in accordance with the joint/splice manufacturer's instructions. Joints/Splices that depend solely on tape for a moisture barrier shall not be used.

b Not more than one joint/splice may be permitted for each 2000 feet of cable installed unless authorized by the Owner. No bends may be permitted within 12 inches of the ends of a joint/splice. The cable or circuit numbers and the exact location of all joints/splices shall be noted on the staking sheets (as built).

13 PRIMARY CABLE TERMINATION AND STRESS CONES

a Prefabricated stress cones or terminations shall be installed in accordance with the manufacturer's instructions at all primary cable terminals. They shall be suitable for the size and type of cable that they are used with and for the environment in which they will

operate. Any indication of misfit, such as a loose or exceptionally tight fit, shall be called to the Owner's attention. The outer semi-conductive surface of the termination shall be bonded to the system neutral. A heat-shrink or cold-shrink sleeve shall be installed to seal between the body of the termination and the cable jacket.

14 SPECIAL PRECAUTION FOR CABLE JOINTS/SPLICES AND TERMINATIONS

A portable covering or shelter shall be available for use when joints/splices or terminations are being prepared and when prefabricated terminations are being switched. The shelter shall be used as necessary to keep rain, snow and windblown dust off the insulating surfaces of these devices. Since cleanliness is essential in the preparation and installation of primary cable fittings, care shall be exercised to prevent the transfer of conducting particles from the hands to insulating surfaces. Mating surfaces shall be wiped with a solvent to remove any possible accumulation of dirt, moisture or other conducting materials. A silicone grease or similar lubricant should be applied afterwards in accordance with the manufacturer's recommendations. Whenever prefabricated cable devices are opened, the unenergized mating surfaces shall be lubricated with silicone grease before the fittings are reconnected.

15 SECONDARY AND SERVICE CONNECTIONS

a 15.1 A suitable inhibiting compound shall be used with all secondary and service connections.

b All secondary cable connections located below grade or in secondary pedestals shall be made with pre-insulated secondary connector blocks. Diving bells with open terminals, insulating boots or moisture barriers that depend solely on tape are not acceptable.

c All transformer secondary phase terminal connections shall be completely insulated. If the secondary phase terminals are threaded studs, the connection shall be made with a pre-insulated secondary transformer connection block. If the transformer secondary phase terminals are insulated cable leads, connection shall be made with a pre-insulated secondary connector block or with a secondary prefabricated joint/splice when the transformer leads continue directly to the service.

d If a transformer is so large that it must have secondary spades, the spades shall be taped or otherwise insulated. Boots used for insulation shall be taped or secured so that they cannot be readily slipped off.

e Secondary connections to terminals of pole-mounted transformers shall be made so that moisture cannot get inside the cable insulation. This may be accomplished by covering the terminals and bare conductor ends with an appropriate moisture sealant (a listing of

acceptable items is in RUS Informational Publication 202-1, List of Materials for use on systems of RUS Electrification Borrowers) or by providing a drip loop.

f 15.6 The secondary connections and insulation shall have accommodations for all future and existing services as shown on the plans and specifications.

16 PEDESTALS

Where required, pedestal stakes shall be driven vertically into the bottom of the trench before cables are placed, and shall be located as shown on the staking sheets. Pedestal posts and supporting stakes shall be in place before the cable is installed. All pedestals should be approximately at the same height above finished grade.

17 INSPECTION AND INVENTORY OF BURIED UNITS

Before any backfilling operations are begun, it is the responsibility of the owner to ensure that the Contractor and Owner shall jointly inspect all trenches, cable placement, risers, pedestal stakes, and other construction that will not be accessible after backfilling, and an inventory of units shall be taken. If corrections are required, a second inspection shall be made after completion of the changes.

18 BACKFILLING

a The first 6 inches of trench backfill shall be free from rock, gravel or other material which might damage the cable jacket. In lieu of cleaning the trench, the Contractor may, at the Contractor's option, place a 2 inch bed of clean sand or soil under the cable and 4 inches of clean soil above the cable. Cleaned soil backfill when used shall contain no solid material larger than l inch. This soil layer shall be carefully compacted so that the cable will not be damaged.

b Backfilling shall be completed in such a manner that voids will be minimized. Excess soil shall be piled on top and shall be well tamped.

c 18.3 Pieces of scrap cable or other material remaining after installation shall not be buried in the trench as a means of disposal.

c Conduit provides protection for the cable to be installed. However, the backfilling method for cable in conduit shall be the same as direct buried cable. Additional protection can be obtained by pouring a concrete cap over a partial filled backfill above the direct buried cable or conduit.

Further protection for the conduits is done by concrete encapsulation using spacers to insure enough concrete surrounds the conduits.

19 EQUIPMENT PADS

The site for the pad shall be on undisturbed earth adjacent to but not over the trench. The site shall be cleared of all debris and excavated to the specified depth. Gravel or sand may be added to the site and thoroughly compacted. The developer/property owner shall provide the finished grade so steps can be taken to insure foundations are installed level at the specified elevation.

20 TRANSFORMERS

Transformers shall be handled carefully to avoid damage to the finish and shall be positioned in accordance with the staking sheets and the plans and specifications. Only qualified and experienced personnel shall be allowed to make connections and cable terminations.

21 BELOW GRADE ENCLOSURES

Excavations for sleeve-type transformer pads and other below-grade enclosures shall be made so as to disturb the surrounding earth as little as practical. Enclosures shall be installed with side walls plumb. When enclosures are of fiber, plastic, or other semi-flexible material, backfilling should be done with covers in place and with careful tamping so as to avoid distortion of the enclosure. When installation is complete, the cover of the enclosure shall not be lower than and not more than 2 inches higher than the grade specified by the Owner. Soil in the immediate vicinity shall be tamped and sloped away from the enclosure. At the Owner's option, the excess soil shall be removed from the site or spread evenly over the surface of the ground to the satisfaction of the Owner.

22 UTILITY SAFETY SIGNS

a Utility safety signs shall be in accordance with the provisions of ANSI Z535.2011 and any updated revision of these codes when it is released, Environmental and Facility Safety Signs shall be applied in accordance with RUS drawings. Copies of the ANSI Z535.2-2011 may be obtained from:

National Electrical Manufacturers Association (NEMA)
1300 North 17th Street
Suite 1847
Rosslyn, Virginia 22209.

b Transformers and other high voltage equipment enclosures installed at ground level in a public access area shall display owner/operator contact information with contact name and telephone number.

23 SACRIFICIAL ANODES

Sacrificial anodes specified shall be installed with backfill package intact and connecting leads positioned for proper connection after the equipment is in place. Anodes shall not be moved, positioned, lifted, nor lowered into place by pulling on the connecting leads.

24 GROUNDING

a 24.1 All neutral conductors, ground electrodes, sacrificial anodes and grounded parts of equipment shall be interconnected. All interconnections for grounding shall be made and consistent with installation standard used by the owner. A copper-clad or galvanized steel ground rod with minimum length of 8 feet shall be installed at all equipment locations and at all accessible cable joints/splices and taps.

b 24.2 All pad-mounted equipment enclosures, including transformers, shall be grounded in such a manner that two separate grounding paths exist between the enclosure and the grounding rod(s).

c 24.3 Counterpoise grounding is an effective means of reducing the impedance to ground in areas of high-resistivity soils. A common designed counterpoise is a horizontal grid or conductor below ground level functioning as one plate of a large capacitor, with the conductive layers of the earth acting as the other plate. A counterpoise shall not be used when normal electrode grounding can be installed.

25 CABLE ROUTE LOCATION MARKERS

The above ground location of permanent cable markers shall be as shown on the staking sheets. URD cable markers provide identification of cable routes to contractors, other utilities, and general public to guard against unauthorized contact.

26 INSTALLED CABLE AND ACCEPTANCE TESTS

a The best method for quality assurance of the cable is to require the manufacturer to submit samples for testing before the cable is accepted. The acceptance tests are simple

checks to ensure that the cable components meet the current specifications and compliance standards. NRECA has a list of cable testing facilities. The typical cable sampling rates are to test one sample, each, from the first and last reel on the order of 50,000 feet or less and one sample for each additional 50,000 feet of cable ordered.

b Continuity: After installation of the cable, authorized personnel shall perform a simple continuity test on the system. This can easily be accomplished by grounding the conductor at the source and checking for continuity from the end of each tap with an ohmmeter or with a battery and ammeter.

c WARNING: A hazardous voltage may exist on the cable; therefore, before handling the cable, the conductor shall be grounded to permit any charge to drain to earth.

27 PLACEMENT OF SURGE ARRESTERS

The arrester connection on a riser pole shall have the grounding conductor going from system neutral to the pole ground to surge arrester ground than to cable neutral/ground. The combination of both the line lead length and ground lead length shall be less than 3 feet.27.2 The higher margin of protection on the underground cable system is reached when the riser type class arresters are used at each overhead riser pole cable termination. Also, by the placement of a distribution class arresters at open points on the cable system to help limit the transient voltage reflection peaks. Note a higher surge arrester MCOV rating should be selected for both open and mid-point arresters on the underground cables system as compared to the MCOV rating of the overhead riser pole arrester.

Bulletin 1728F-806
Attachment A - Drawing Descriptions
Attachment B - Construction Drawings
Attachment C - RUS Standard Format and Meaning of Underground Distribution Assembly Numbers

Attachment A

SECTION	CATEGORY DESCRIPTIONS
UA	SINGLE-PHASE RISER POLE ASSEMBLY UNITS Single-Phase Riser Primary Pole Installations
UA1	Single Phase Cable Terminal Pole with Two Brackets
UA2	Single Phase Cable Terminal Pole with One Bracket
UA3	Single Phase Cable Terminal Pole with Crossarm Mounted Cutout
UA4	Single Phase Cable Terminal Pole without Cutout
UA.G	Cable Terminal Pole Arrester Connection Guide
UA1.USG	Alternate Connection For Underground Source Guide
UB	TWO-PHASE RISER POLE ASSEMBLY UNITS Two-Phase Riser Primary Pole Installations
UB1	Two Phase Cable Terminal Pole with Cutouts and Crossarm Mounting Arresters
UB2	Two Phase Cable Terminal Pole with Cutouts and Bracket Mounting Arresters
UB3	Two Phase Cable Terminal Pole without Cutouts and Crossarm Mounting Arresters
UB4	Two Phase Cable Terminal Pole without Cutouts and Bracket Mounting Arresters
UB5	Two Phase Cable Terminal Pole with Upper Crossarm Mounting Cutouts and Crossarm Mounting Arresters
UB6	Two Phase Cable Terminal Pole with Upper Crossarm Mounting Cutouts and Bracket Mounting Arresters
UC	THREE-PHASE RISER POLE ASSEMBLY UNITS Three-Phase Riser Primary Pole Installations
UC1	Three Phase Cable Terminal Pole with Cutouts and Crossarm Mounting Arresters
UC2	Three Phase Cable Terminal Pole with Cutouts and Bracket Mounting Arresters
UC3	Three Phase Cable Terminal Pole without Cutouts and Crossarm Mounting Arresters
UC4	Three Phase Cable Terminal Pole without Cutouts and Bracket Mounting Arresters
UC5	Three Phase Cable Terminal Pole with Upper Crossarm Mounting Cutouts and Crossarm Mounting Arresters

UC6	Three Phase Cable Terminal Pole with Upper Crossarm Mounting Cutouts and Bracket Mounting Arresters
UC7.1	Bracket Mounting Switches
UC7.2	Horizontal Mounting Switches
UC7.3	Vertical Switches Mounted on Three Crossarms
UC7.4	Vertical Switches Mounted on Four Crossarms
UC8.1	Three Phase Cable Terminal Pole with Vertical Framing and Two Brackets per Phase
UC8.2	Three Phase Cable Terminal Pole with Vertical Framing and One Brackets per Phase

UF <u>FOUNDATIONS ASSEMBLY UNITS</u>
Types & Products Used in Foundation Installations

UF.PBC, UF.PBN	Primary Pull Box Underground Cable
UF1.BC, UF1.BN	Single Phase Equipment Foundations
UF1.PC, UF1.PN, UF3.PN	Single Phase and Three Phase Equipment Foundations
UF3.BC, UF3.BN, UF3.VC	Three Phase Equipment Foundations
UF3.PC	Concrete Pad for Thee Phase Equipment

UG <u>TRANSFORMER ASSEMBLY UNITS</u>
Types & Products Used in Transformer Installations

UG1.01, UG1.1	Single Phase One Bushing Padmounted Transformer (Radial Feed)
UG1.2	Single Phase Two Bushing Padmounted Transformer (Radial Feed)
UG1.02, UG1.3	Single Phase Two Bushing Padmounted Transformer (Loop Feed)
UG2.1	Open Delta Connection with Single Phase Padmounted Transformers
UG3.01, UG3.1	Three Phase Three Bushing Padmounted Transformer (Radial Feed)
UG3.2	Three Phase Six Bushing Padmounted Transformer (Radial Feed)
UG3.02, UG3.3	Three Phase Six Bushing Padmounted Transformer (Loop Feed)

UH GROUNDING ASSEMBLY UNITS
Types & Methods used in Grounding Installations

UH.01	Ground Rod Assembly
UH1.1	Grounding Assembly for Padmounted Transformers and Enclosures (1 Rod)
UH1.2	Grounding Assembly for Padmounted Transformers and Enclosures (2 Rod)
UH1.4	Grounding Assembly for Padmounted Transformers and Enclosures (4 Rod)
UH1.7	Grounding Array for Padmounted Transformers and Enclosures
UH2.0, UH2.2	Counterpoise Grounding
UH2.7	Trench Type Grounding Assembly – Riser to Transformer Outside of Conduit
UH3.1	Grounding Assembly for Sectionalizing Enclosures (1 Rod)
UH4.1	Grounding Assembly for Cable Above Grade Enclosures (1 Rod)
UH4.1G	Jacketed Cable Grounding Installation (Heat Shrink or Cold Shrink)

UJ SECONDARY ASSEMBLY UNITS
Types & Products used in Secondary Installations

UJ1.01	Secondary Splice
UJ1	Secondary Insulated Connector Block
UJ2	Transformer Connector Block
UJ3.1	Secondary Pedestal Single Phase Above Grade Enclosure
UJ3.3	Secondary Pedestal Three Phase Above Grade Enclosure
UJ4.1	Secondary Handhole Single Phase Below Grade Enclosure
UJ4.3	Secondary Handhole Three Phase Below Grade Enclosure

UK SECONDARY SERVICE ASSEMBLY UNITS
Types & Products used in Secondary Meter Installations

UK1.1	Secondary Cable Riser Pole without Meter Base
UK2.1	Secondary Riser Bottom Connection
UK2.2	Secondary Riser Bottom Side Connection
UK3.1	Temporary Conduit Termination without Meter Base
UK4	Secondary Breaker

UM MISCELLANEOUS ASSEMBLY UNITS
Miscellaneous Installation Products & Service

UM1.XX	Right-Of-Way Clearing
UM2	Cable Route Marker
UM3	Safety Signs

UM6.C,	Caps and Plugs
UM6.PL	
UM6.EL	Elbows
UM6.FI	Fault Indicators
UM6.IN	Inserts
UM6.JN	Multipoint Junctions
UM6.PK	Parking Stands
UM6.RK,	Primary Terminations
UM6.SP,	
UM6.T,	
UM6.TS	

UO <u>OUTDOOR LIGHTING ASSEMBLY UNITS</u>
Types & Products used in Outdoor Lighting Installations

UO1	Outdoor Light Installation Guide
UO2	Light Structure Installation Guide

UP <u>SYSTEM PROTECTION ASSEMBLY UNITS</u>
System Cable Protection & Interface Products Used

UP1,	Arresters
UP2,	
UP3	
UP4,	Arresters and Anodes
UP5	
UP7.01,	Riser Shield, Back Plate, Conduit Cable Riser
UP7.02,	
UP7.03	
UP7.04	Conduit Elbow
UP7.B1	Single Conduit Riser with Stand-Off Brackets
UP7.B2	Two Conduit Riser with Stand-Off Brackets
UP7.B3	Three Conduit Riser with Stand-Off Brackets
UP7.C	Strap Attached Conduit Riser
UP7.FC	Flex Conduit Riser
UP7.UG	U-Guard Riser
UP8	Underground Conduit

UQ <u>METERING ASSEMBLY UNITS</u>
Types & Products used in Metering Installations

UQG	Meter Options Guide
UQ_._B_	Meter on Building
UQ_._P_,	Through Type Meter Pedestal and Meter Pedestal Wood Post
UQ_._S_	
UQ_._T_	Meter Pedestal at Transformer

UR <u>RECLOSER ASSEMBLY UNITS</u>
Types & Products used in Recloser Installations

UR3._ _	Three Phase Padmounted Recloser

US <u>SECTIONALIZING ASSEMBLY UNITS</u>
Types & Products used in System Sectionalizing Installations

US1.DC	Single Phase Padmounted Transformer Deferred Unit Cabinet Type
US1.DP	Single Phase Padmounted Transformer Deferred Unit Pedestal Type
US1.DV	Single Phase Padmounted Transformer Deferred Unit Pad Sleeve Type
US1.PJ.,	Single and Three Phase Primary Junctions
US3.PJ.	
US_SF_	Switch / Fuse Enclosure Installation
US1.SF_,	Single Pole Switching 200 Amp Fuse Enclosure Installation Wiring Diagrams
US2.SF_	(Single Phase & Two Phase)
US3.SF_	Fuse Enclosure (200-600 Amp) Wiring Diagrams (Three Phase)

UT <u>TRENCH ASSEMBLY UNITS</u>
Types & Products used in Trenching & Boring Installations

UT1,	Trenches for Conduit and Direct Burial Cables
UT2,	
UT3,	
UT4,	
UT5	

UY <u>VOLTAGE ASSEMBLY UNITS</u>
Types & Products used in Voltage Control Installations

UY1.1.XX	Single Phase Padmounted Voltage Regulation with No Bypass Switch
UY1.1.XXSW	Single Phase Padmounted Voltage Regulation with Bypass Switch
UY3.2L	Three Phase Padmounted Shunt Reactor with Loop Feed
UY3.3L	Three Phase Padmounted Capacitor with Loop Feed

Attachment B

Construction Drawings

SINGLE PHASE RISER POLE ASSEMBLY UNITS

DRAWING NUMBERS		**DRAWING TITLE (DESCRIPTION)**
1728F-806 (New)	**1728F-806** (Old)	
UA1	UA1	SINGLE PHASE CABLE TERMINAL POLE WITH TWO BRACKETS
UA2	UA2	SINGLE PHASE CABLE TERMINAL POLE WITH ONE BRACKET
UA3	UA3	SINGLE PHASE CABLE TERMINAL POLE WITH CROSSARM MOUNTED CUTOUT
UA4		SINGLE PHASE CABLE TERMINAL POLE WITHOUT CUTOUT
UA.G	UX11	CABLE TERMINAL POLE ARRESTER CONNECTION GUIDE
UA1.USG		UNDERGROUND SOURCE CONNECTION GUIDE

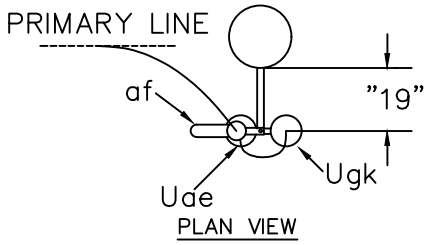

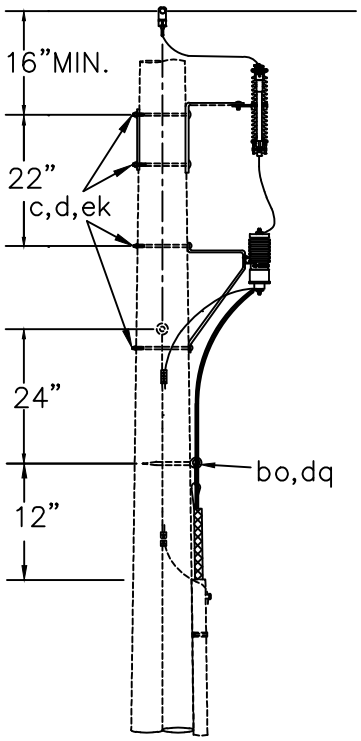

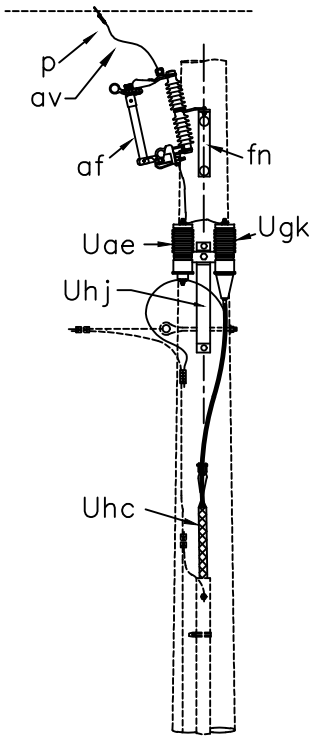

ITEM	QTY.	MATERIAL
c	4	Bolt, machine, 5/8" x required length.
d	4	Washer, square 2 1/4".
p		Connectors, as required.
af	1	Fuse link.
af	1	Cutout
av		Jumpers, as required.
bo	1	Anchor, shackle. Do not use if drive
		hook is used.
dq	1	Eye screw, elliptical or drive hook.
ek	4	Locknuts
fn	1	Bracket, cutout extension.
Uae	1*	Surge arrester
Ugk	1	Cable termination.
Uhc	1	Cable support.
Uhj	1	Bracket combination.

NOTES:

1. TOTAL ARRESTER LEAD LENGTH MUST BE UNDER 3'.
2. NO BENDS PERMITTED WITHIN 6" OF CABLE TERMINAL BASE.
3. MINIMUM 4" BETWEEN BOLTS.

SINGLE PHASE CABLE
TERMINAL POLE WITH TWO BRACKETS

AUG 2016	1 – PHASE PRIMARY	
RUS		UA1

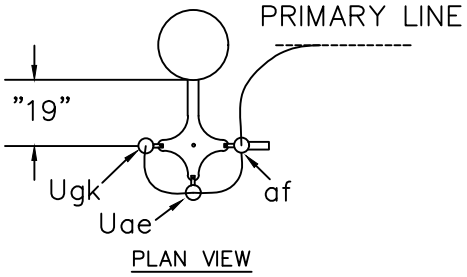

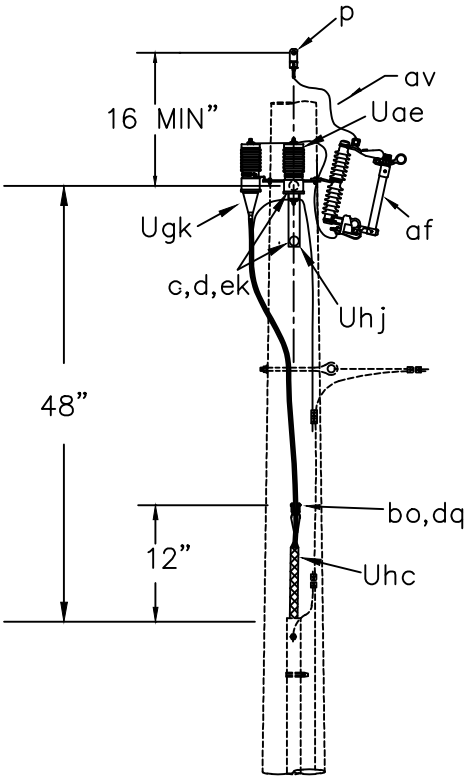

ITEM	QTY.	MATERIAL
c	2	Bolt, machine, 5/8" x required length.
d	2	Washer, square 2 1/4".
p		Connectors, as required.
af	1	Fuse link.
af	1	Cutout
av		Jumpers, as required.
bo	1	Anchor, shackle. Do not use if drive
		hook is used.
dq	1	Eye screw, elliptical or drive hook.
ek	2	Locknuts
fn	1	Bracket, cutout extension.
Uae	1*	Surge arrester
Ugk	1	Cable termination.
Uhc	1	Cable support.
Uhj	1	Bracket combination.

NOTES:

1. TOTAL ARRESTER LEAD LENGTH MUST BE UNDER 3'.
2. NO BENDS PERMITTED WITHIN 6" OF CABLE TERMINAL BASE.
3. MINIMUM 4" BETWEEN BOLTS.

SINGLE PHASE CABLE
TERMINAL POLE WITH ONE BRACKET

AUG 2016	1 – PHASE PRIMARY	
RUS		UA2

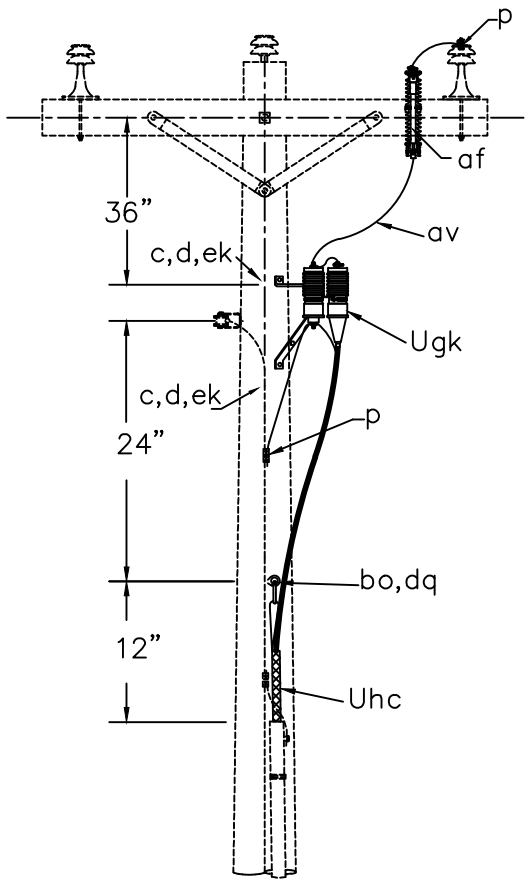

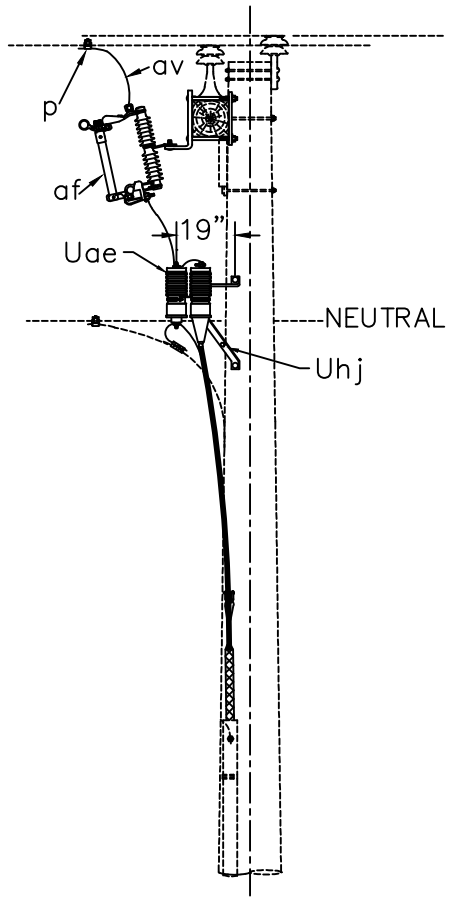

ITEM	QTY.	MATERIAL
c	2	Bolt, machine, 5/8” x required length.
d	2	Washer, square 2 1/4”.
j		Screw, lag 1/2” x 4” as required.
p		Connectors, as required.
af	1	Fuse link.
af	1	Cutout.
av		Jumpers, as required.
bo	1	Anchor, shackle. Do not use if drive
		hook is used.
dq	1	Eye screw, elliptical or drive hook.
ek	2	Locknuts.
Uae	1*	Surge arrester.
Ugk	1	Cable termination.
Uhc	1	Cable support.
Uhj	1	Bracket combination.

NOTES:

1. TOTAL ARRESTER LEAD LENGTH MUST BE UNDER 3’.
2. NO BENDS PERMITTED WITHIN 6” OF CABLE TERMINAL BASE.
3. MINIMUM 4” BETWEEN BOLTS

SINGLE PHASE CABLE TERMINAL POLE
WITH CROSSARM MOUNTED CUTOUT

AUG 2016	1 – PHASE PRIMARY	
RUS		UA3

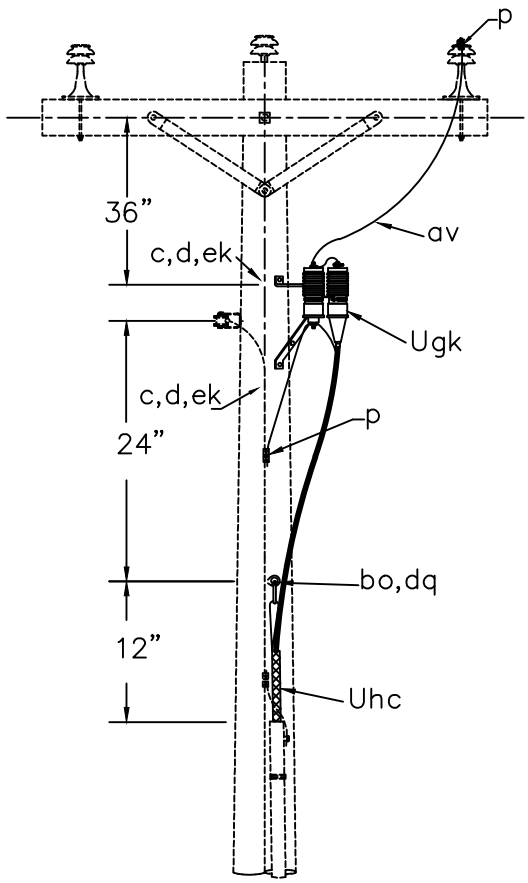

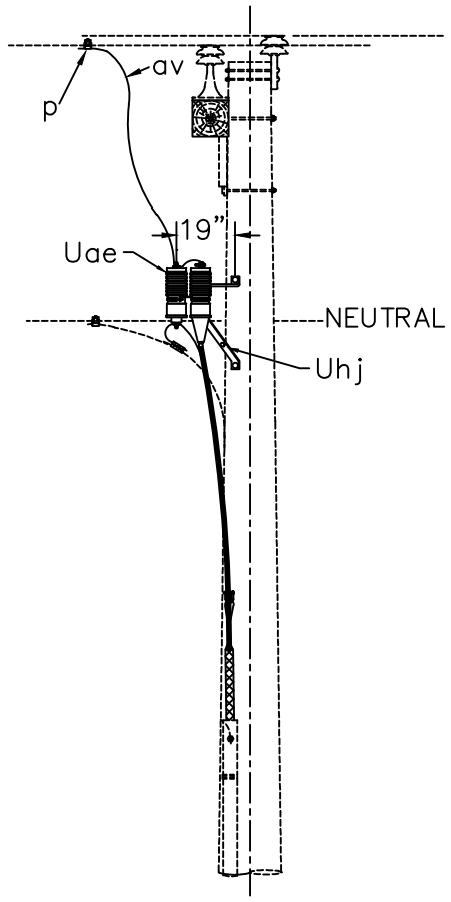

ITEM	QTY.	MATERIAL
c	2	Bolt, machine, 5/8" x required length.
d	2	Washer, square 2 1/4".
j		Screw, lag 1/2" x 4" as required.
p		Connectors, as required.
af	1	Fuse link.
av		Jumpers, as required.
bo	1	Anchor, shackle. Do not use if drive
		hook is used.
dq	1	Eye screw, elliptical or drive hook.
ek	2	Locknuts
Uae	1*	Surge arrester
Ugk	1	Cable termination.
Uhc	1	Cable support.
Uhj	1	Bracket combination.

NOTES:

1. TOTAL ARRESTER LEAD LENGTH MUST BE UNDER 3'.
2. NO BENDS PERMITTED WITHIN 6" OF CABLE TERMINAL BASE.
3. MINIMUM 4" BETWEEN BOLTS

SINGLE PHASE CABLE TERMINAL
POLE WITHOUT CUTOUT

AUG 2016	1 – PHASE PRIMARY	
RUS		UA4

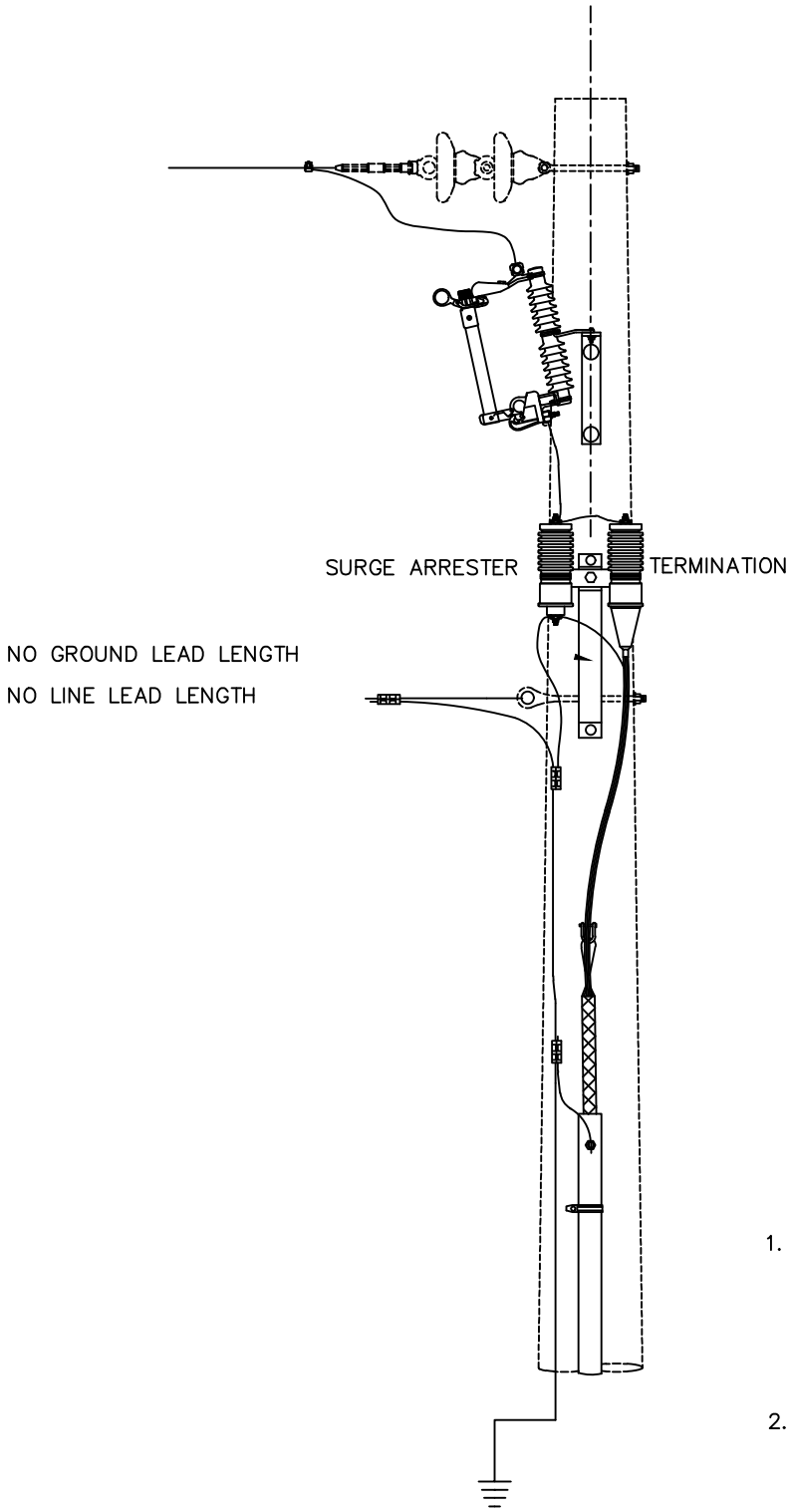

NOTES:

1. ARRESTER LEAD LENGTH IS ZERO IF SOURCE VOLTAGE LEAD GOES DIRECTLY TO ARRESTER THEN TO CABLE TERMINATION AND THE GROUND LEAD GOES DIRECTLY FROM CABLE TERMINATION TO ARRESTER TO POLE GROUND.
2. LEAD WIRE FROM LINE TO ARRESTER TO TERMINATION SHOULD BE OF A SIZE EQUIVALENT TO RISER CONDUCTOR. CONNECTORS ON ARRESTER AND TERMINATION SHOULD BE SPECIFIED TO ACCOMODATE LEAD WIRE.

GUIDELINE ONLY

CABLE TERMINAL POLE ARRESTER
CONNECTION GUIDE

AUG 2016		
RUS		UA.G

REVISED CONNECTIONS FOR UNDERGROUND SOURCE

1. OBJECTIVE: FUSE TUBE IS NOT ENERGIZED WHEN FUSE TUBE IS OPEN
2. MATERIAL SAME AS NORMAL FEED RISER ASSEMBLY

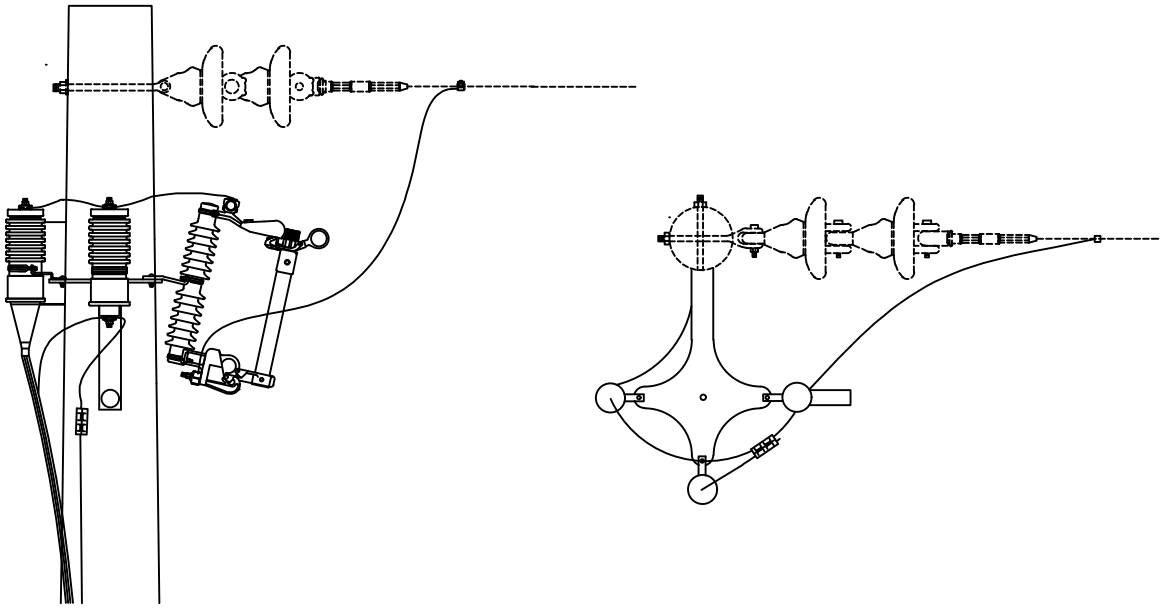

ALTERNATE CONNECTION FOR UNDERGROUND SOURCE GUIDE		
AUG 2016		
RUS		UA1.USG

TWO PHASE RISER POLE ASSEMBLY UNITS

DRAWING NUMBERS		**DRAWING TITLE (DESCRIPTION)**
1728F-806 (New)	**1728F-806** (Old)	
UB1	(UB1)	TWO PHASE CABLE TERMINAL POLE WITH CUTOUTS AND CROSSARM MOUNTING ARRESTERS
UB2	(UB2)	TWO PHASE CABLE TERMINAL POLE WITH CUTOUTS AND BRACKET MOUNTING ARRESTERS
UB3	(UB3)	TWO PHASE CABLE TERMINAL POLE WITHOUT CUTOUTS AND CROSSARM MOUNTING ARRESTERS
UB4	(UB4)	TWO PHASE CABLE TERMINAL POLE WITHOUT CUTOUTS AND BRACKET MOUNTING ARRESTERS
UB5		TWO PHASE CABLE TERMINAL POLE WITH UPPER CROSSARM MOUNTING CUTOUTS AND CROSSARM MOUNTING ARRESTERS
UB6		TWO PHASE CABLE TERMINAL POLE WITH UPPER CROSSARM MOUNTING CUTOUTS AND BRACKET MOUNTING ARRESTERS

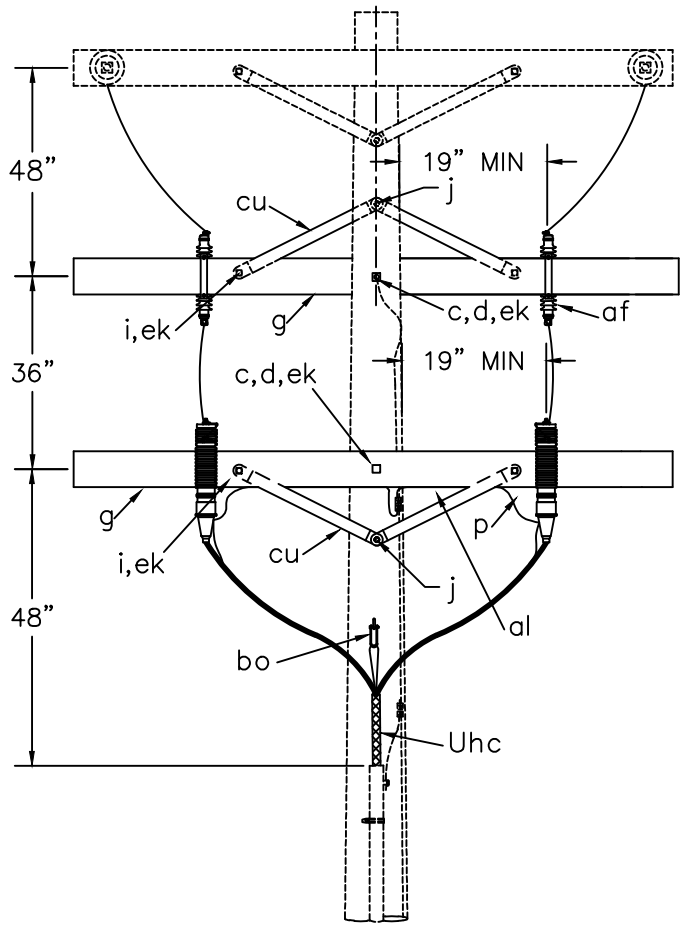

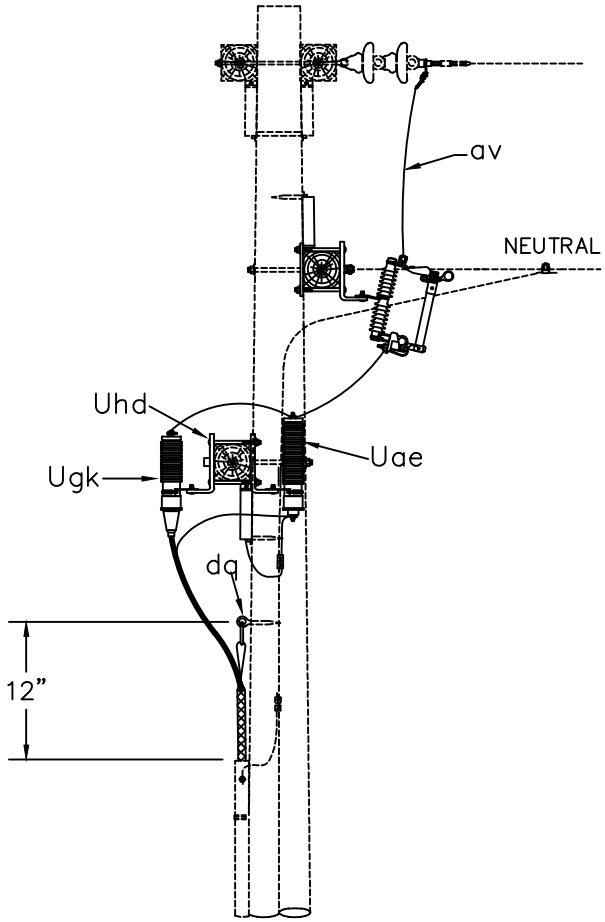

ITEM	QTY.	MATERIAL
c	2	Bolt, machine, 5/8” x required length.
d	4	Washer, square 2 1/4”.
g	2	Crossarm, 3 5/8” x 4 5/8” x 8’–0”
i	4	Bolt, carriage, 3/8” x 4 1/2”
j	2	Screw, lag 1/2” x 4” as required.
p		Connectors, as required.
af	2	Cutout
al		Staples, as required.
av		Jumpers, as required.
bo	1	Anchor, shackle.
cu	4	Brace, wood, 28”
dq	1	Eye screw, elliptical or drive hook.
ek	6	Locknuts, as required.
Uae	2*	Surge arrester
Ugk	2	Cable termination.
Uhc	2	Cable support.
Uhd	2	Crossarm mounting bracket.

NOTES:

1. TOTAL ARRESTER LEAD LENGTH MUST BE UNDER 3’.
2. NO BENDS PERMITTED WITHIN 6” OF CABLE TERMINAL BASE.
3. MINIMUM 4” BETWEEN BOLTS.

TWO PHASE CABLE TERMINAL POLE
WITH CUTOUTS AND CROSSARM
MOUNTING ARRESTERS

AUG 2016	2 – PHASE PRIMARY	
RUS		UB1

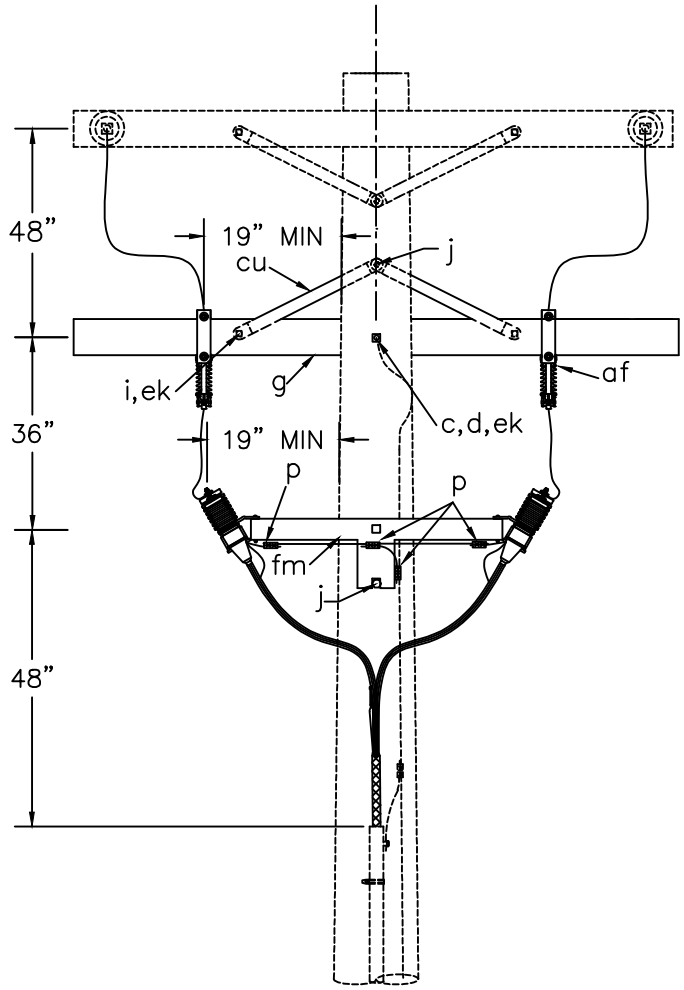

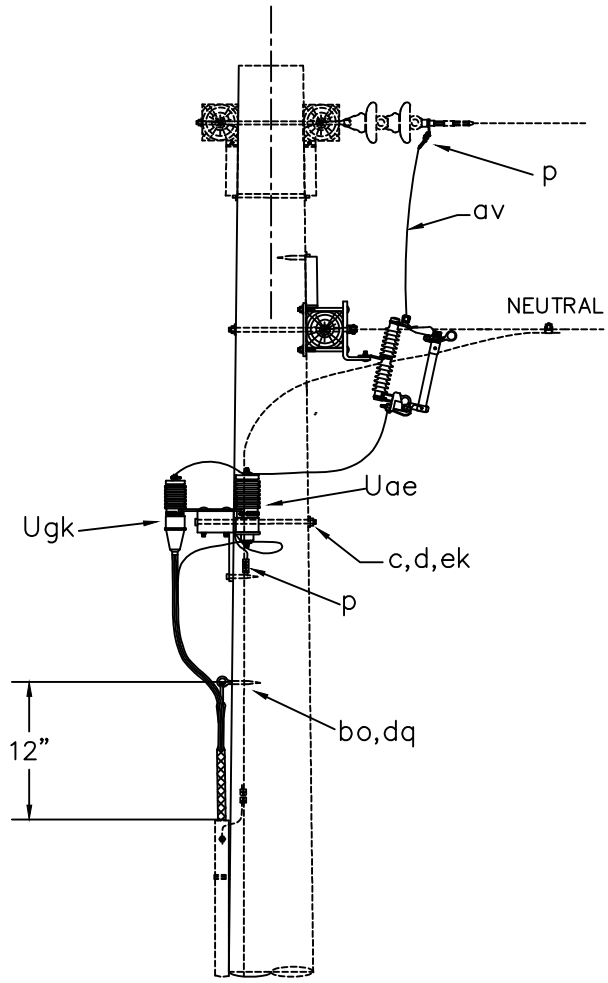

ITEM	QTY.	MATERIAL
c	2	Bolt, machine, 5/8” x required length.
d	4	Washer, square 2 1/4”.
g	1	Crossarm, 3 5/8” x 4 5/8” x 8’–0”
i	2	Bolt, carriage, 3/8” x 4 1/2”
j	2	Screw, lag 1/2” x 4” as required.
p		Connectors, as required.
af	2	Cutout
al		Staples, as required.
av		Jumpers, as required.
bo	1	Anchor, shackle.
cu	2	Brace, wood, 28”
dq	1	Eye screw, elliptical or drive hook.
ek	4	Locknuts, as required.
fm	1	Mounting bracket.
Uae	2*	Surge arrester
Ugk	2	Cable termination.
Uhc	2	Cable support.

NOTES:

1. TOTAL ARRESTER LEAD LENGTH MUST BE UNDER 3’.
2. NO BENDS PERMITTED WITHIN 6” OF CABLE TERMINAL BASE.
3. MINIMUM 4” BETWEEN BOLTS.

TWO PHASE CABLE TERMINAL POLE
WITH CUTOUTS AND BRACKET
MOUNTING ARRESTERS

AUG 2016	2 – PHASE PRIMARY	
RUS		UB2

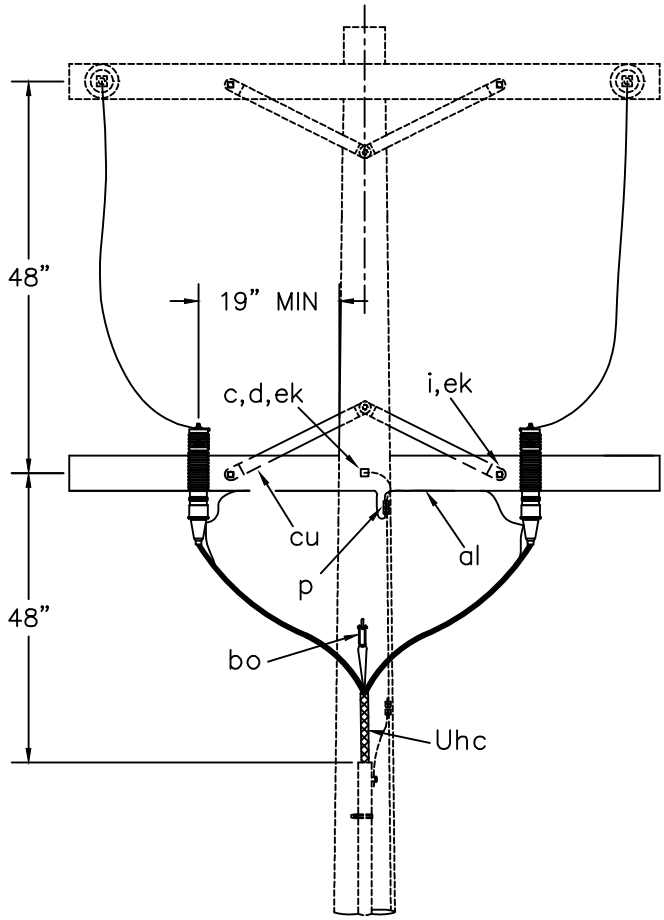

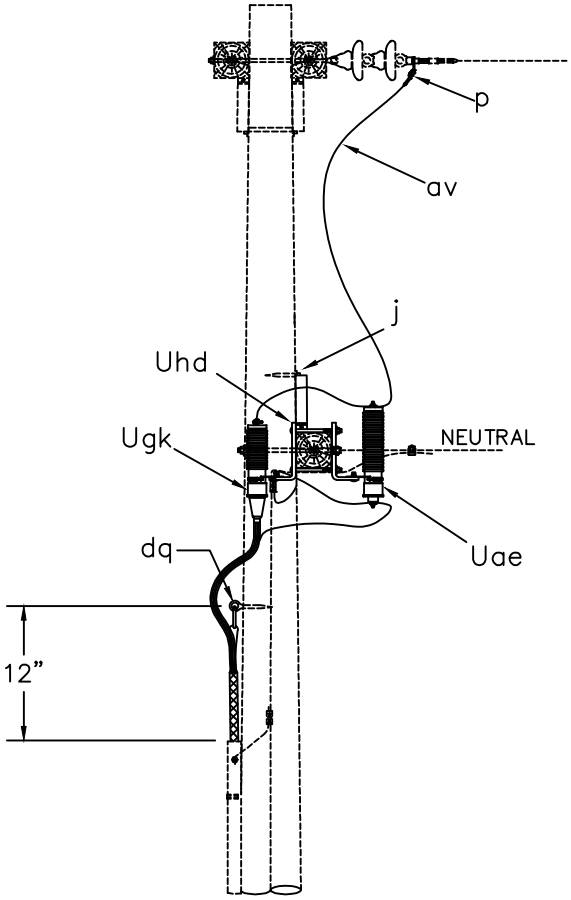

ITEM	QTY.	MATERIAL
c	1	Bolt, machine, 5/8" x required length.
d	2	Washer, square 2 1/4".
g	1	Crossarm, 3 5/8" x 4 5/8" x 8'–0"
i	2	Bolt, carriage, 3/8" x 4 1/2"
j		Screw, lag 1/2" x 4" as required.
p		Connectors, as required.
al		Staples, as required.
av		Jumpers, as required.
bo	1	Anchor, shackle.
cu	2	Brace, wood, 28"
dq	1	Eye screw, elliptical or drive hook.
ek	3	Locknuts, as required.
Uae	2*	Surge arrester
Ugk	2	Cable termination.
Uhc	2	Cable support.
Uhd	2	Crossarm mounting bracket.

NOTES:

1. TOTAL ARRESTER LEAD LENGTH MUST BE UNDER 3'.
2. NO BENDS PERMITTED WITHIN 6" OF CABLE TERMINAL BASE.
3. MINIMUM 4" BETWEEN BOLTS.

TWO PHASE CABLE TERMINAL POLE
WITHOUT CUTOUTS AND CROSSARM
MOUNTING ARRESTERS

AUG 2016	2 – PHASE PRIMARY	
RUS		UB3

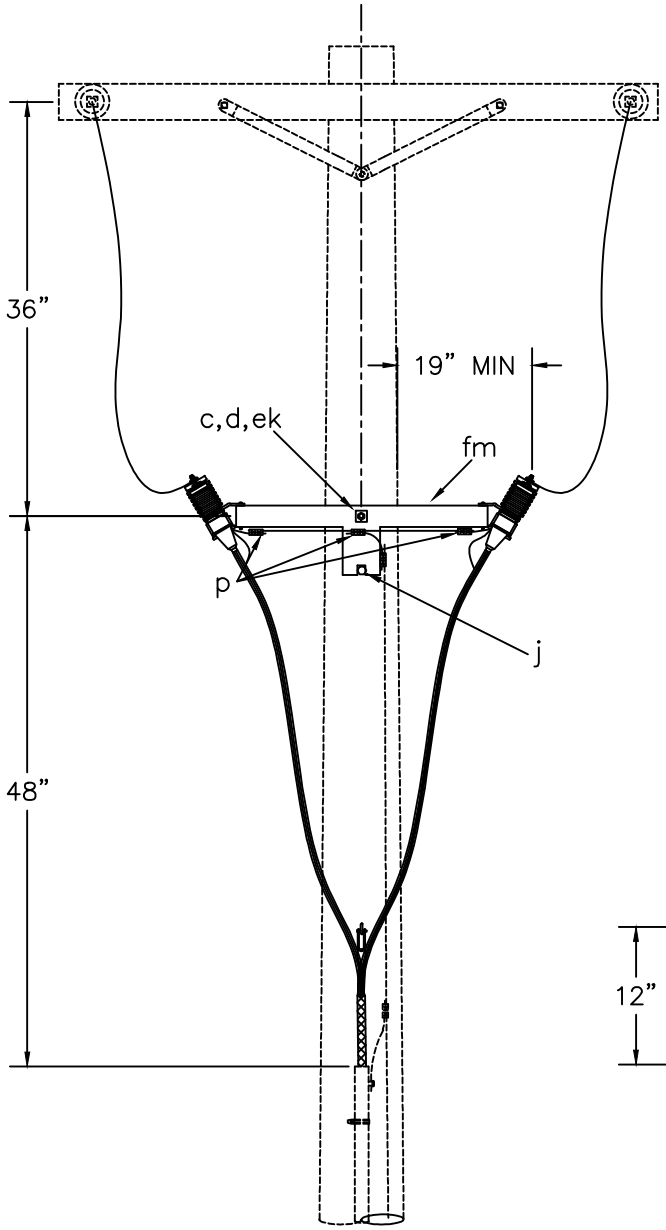

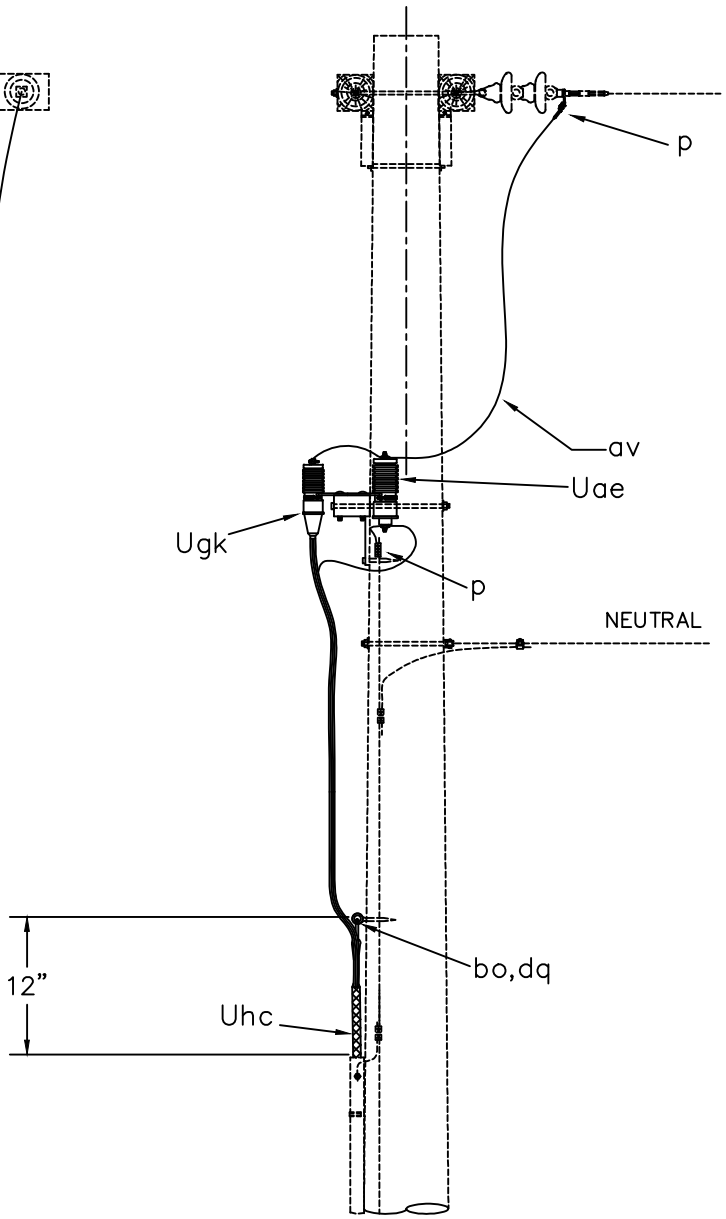

ITEM	QTY.	MATERIAL
c	1	Bolt, machine, 5/8" x required length.
d	2	Washer, square 2 1/4".
j	1	Screw, lag 1/2" x 4" as required.
p		Connectors, as required.
av		Jumpers, as required.
bo	1	Anchor, shackle.
dq	1	Eye screw, elliptical or drive hook.
ek	1	Locknuts, as required.
fm	1	Mounting Bracket.
Uae	2*	Surge arrester
Ugk	2	Cable termination.
Uhc	2	Cable support.

NOTES:

1. TOTAL ARRESTER LEAD LENGTH MUST BE UNDER 3'.
2. NO BENDS PERMITTED WITHIN 6" OF CABLE TERMINAL BASE.
3. MINIMUM 4" BETWEEN BOLTS.

TWO PHASE CABLE TERMINAL POLE
WITHOUT CUTOUTS AND BRACKET
MOUNTING ARRESTERS

AUG 2016	2 – PHASE PRIMARY	
RUS		UB4

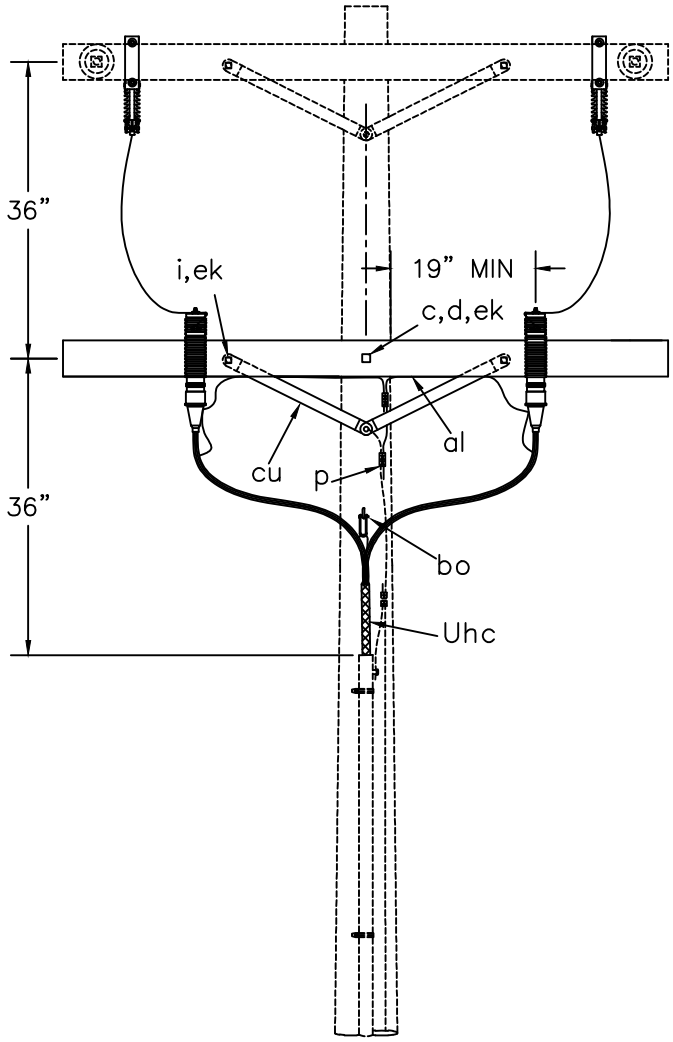

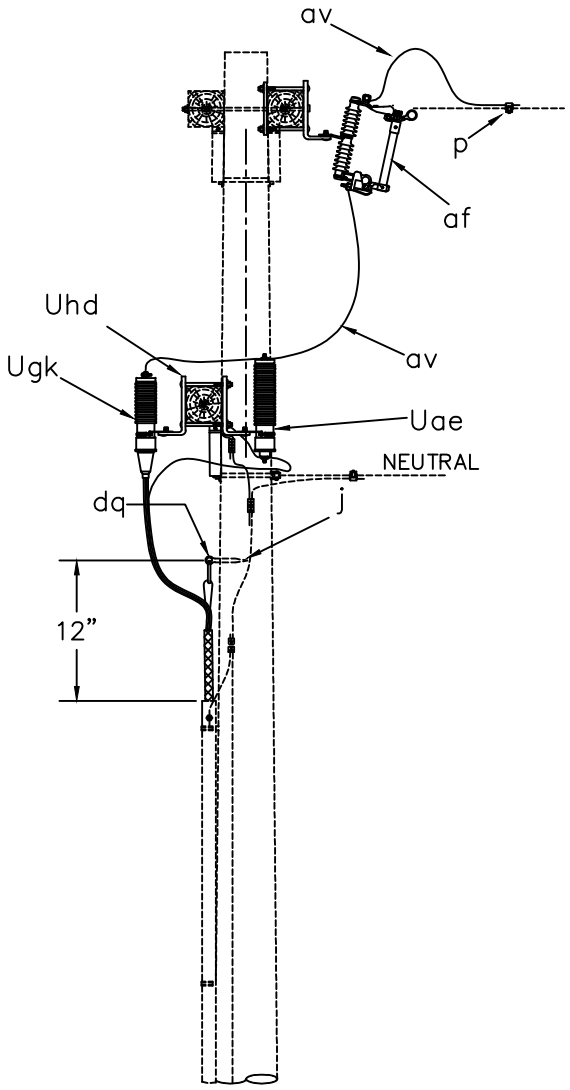

ITEM	QTY.	MATERIAL
c	1	Bolt, machine, 5/8” x required length.
d	2	Washer, square 2 1/4”.
g	1	Crossarm, 3 5/8” x 4 5/8” x 8’–0”
i	2	Bolt, carriage, 3/8” x 4 1/2”
j		Screw, lag 1/2” x 4” as required.
p		Connectors, as required.
af	2	Cutout
al		Staples, as required.
av		Jumpers, as required.
bo	1	Anchor, shackle.
cu	2	Brace, wood, 28”
dq	1	Eye screw, elliptical or drive hook.
ek	3	Locknuts, as required.
Uae	2*	Surge arrester
Ugk	2	Cable termination.
Uhc	2	Cable support.
Uhd	2	Crossarm mounting bracket.

NOTES:

1. TOTAL ARRESTER LEAD LENGTH MUST BE UNDER 3’.
2. NO BENDS PERMITTED WITHIN 6” OF CABLE TERMINAL BASE.
3. MINIMUM 4” BETWEEN BOLTS.

TWO PHASE CABLE TERMINAL POLE
WITH UPPER CROSSARM MOUNTING CUTOUTS
AND CROSSARM MOUNTING ARRESTERS

AUG 2016	2 – PHASE PRIMARY	
RUS		UB5

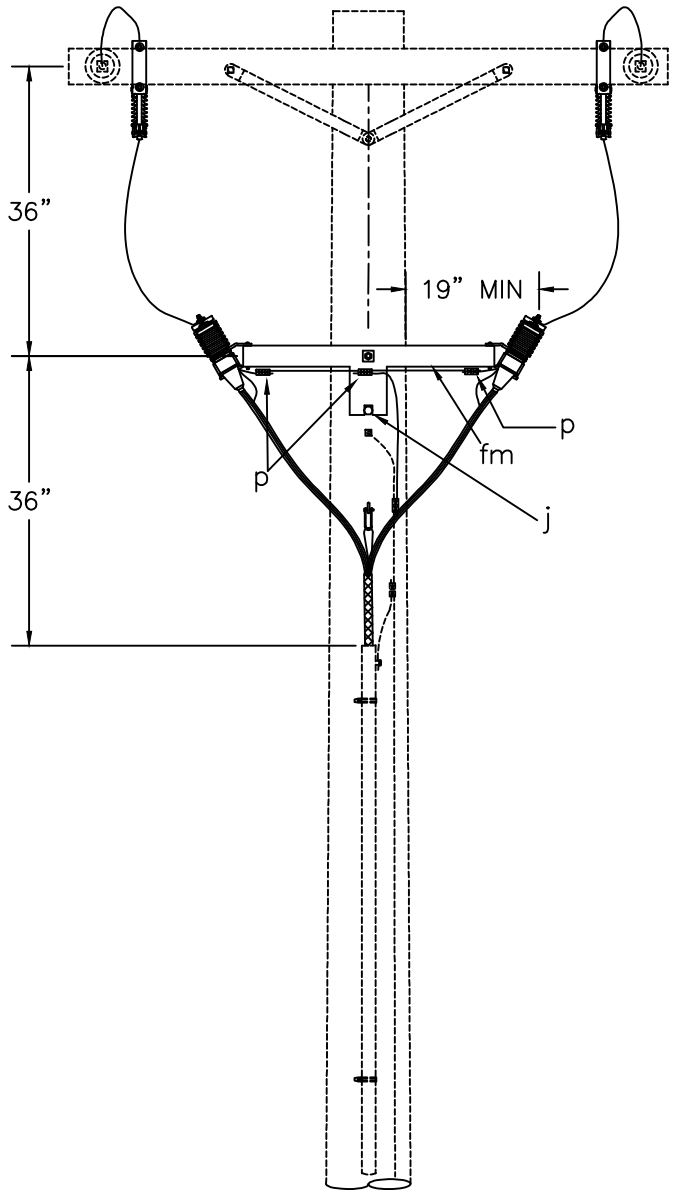

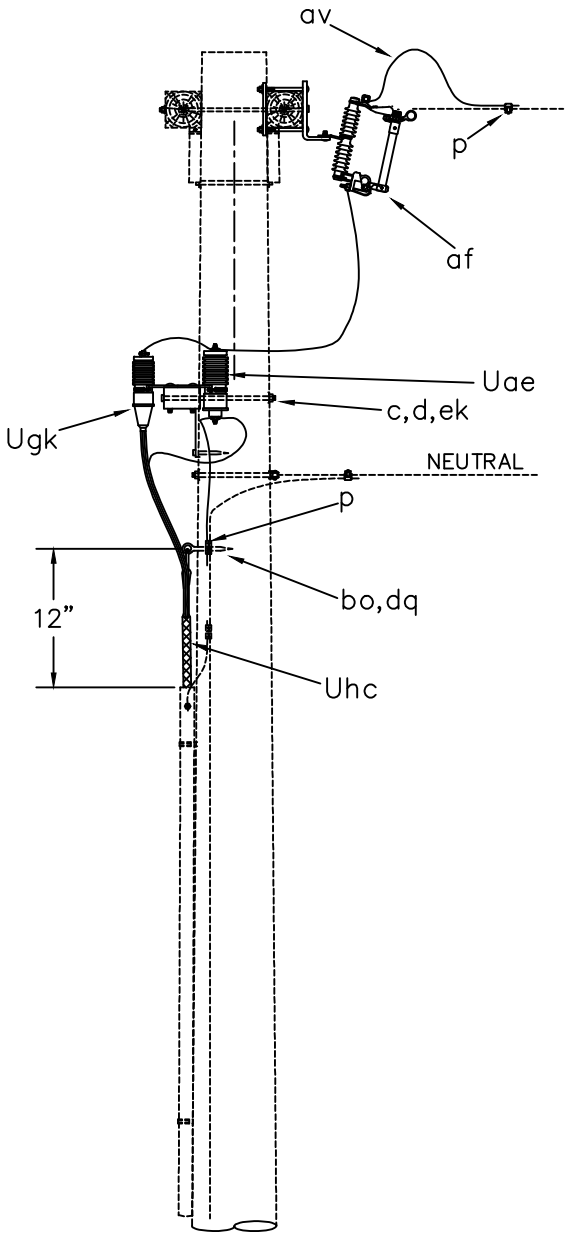

ITEM	QTY.	MATERIAL
c	1	Bolt, machine, 5/8" x required length.
d	2	Washer, square 2 1/4".
j	1	Screw, lag 1/2" x 4" as required.
p		Connectors, as required.
af	2	Cutout
av		Jumpers, as required.
bo	1	Anchor, shackle.
ek	1	Locknuts, as required.
fm	1	Mounting bracket.
dq	1	Eye screw, elliptical or drive hook.
Uae	2*	Surge arrester
Ugk	2	Cable termination.
Uhc	2	Cable support.

NOTES:

1. TOTAL ARRESTER LEAD LENGTH MUST BE UNDER 3'.
2. NO BENDS PERMITTED WITHIN 6" OF CABLE TERMINAL BASE.
3. MINIMUM 4" BETWEEN BOLTS.

TWO PHASE CABLE TERMINAL POLE
WITH UPPER CROSSARM MOUNTING CUTOUTS
AND BRACKET MOUNTING ARRESTERS

AUG 2016	2 – PHASE PRIMARY	
RUS		UB6

THREE PHASE RISER POLE ASSEMBLY UNITS

DRAWING NUMBERS		**DRAWING TITLE (DESCRIPTION)**
1728F-806 (New)	**1728F-806** (Old)	
UC1	(UC1)	THREE PHASE CABLE TERMINAL POLE WITH CUTOUTS AND CROSSARM MOUNTING ARRESTERS
UC2	(UC2)	THREE PHASE CABLE TERMINAL POLE WITH CUTOUTS AND BRACKETS MOUNTING ARRESTERS
UC3		THREE PHASE CABLE TERMINAL POLE WITHOUT CUTOUTS AND CROSSARM MOUNTING ARRESTERS
UC4		THREE PHASE CABLE TERMINAL POLE WITHOUT CUTOUTS AND BRACKET MOUNTING ARRESTERS
UC5		THREE PHASE CABLE TERMINAL POLE WITH UPPER CROSSARM MOUNTING CUTOUTS AND CROSSARM MOUNTING ARRESTERS
UC6	(UC2-1) (UC2-2)	THREE PHASE CABLE TERMINAL POLE WITH UPPER CROSSARM MOUNTING CUTOUTS AND BRACKET MOUNTING ARRESTERS
UC7.1		BRACKET MOUNTED SWITCHES
UC7.2	(UC5-1,UC6-1)	HORIZONTAL MOUNTED SWITCHES
UC7.3		VERTICAL SWITCHES MOUNTED ON THREE CROSSARMS
UC7.4		VERTICAL SWITCHES MOUNTED ON FOUR CROSSARMS
UC8.1		THREE PHASE CABLE TERMINAL POLE WITH VERTICAL FRAMING AND TWO BRACKETS PER PHASE
UC8.2		THREE PHASE CABLE TERMINAL POLE WITH VERTICAL FRAMING AND ONE BRACKET PER PHASE

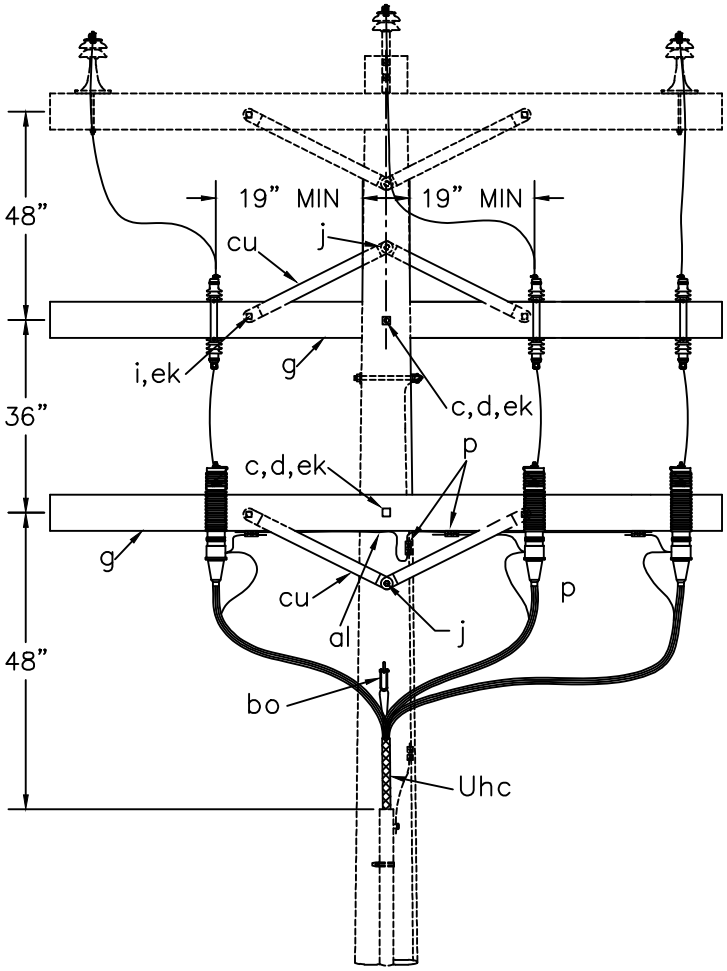

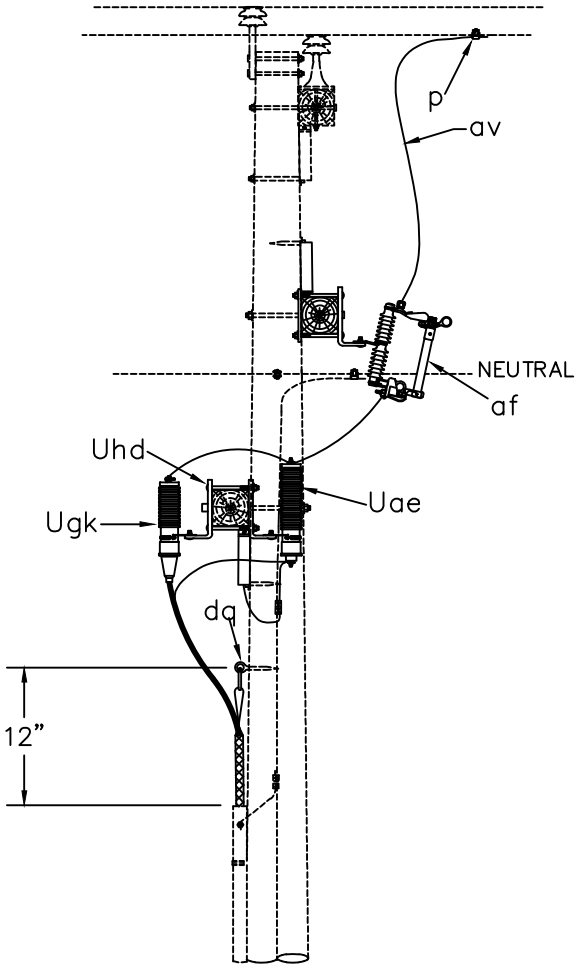

ITEM	QTY.	MATERIAL
c	2	Bolt, machine, 5/8" x required length.
d	4	Washer, square 2 1/4".
g	2	Crossarm, 3 5/8" x 4 5/8" x 8'–0"
i	4	Bolt, carriage, 3/8" x 4 1/2"
j	2	Screw, lag 1/2" x 4" as required.
p		Connectors, as required.
af	3	Cutout
al		Staples, as required.
av		Jumpers, as required.
bo	1	Anchor, shackle.
cu	4	Brace, wood, 28"
dq	1	Eye screw, elliptical or drive hook.
ek	6	Locknuts, as required.
Uae	3*	Surge arrester
Ugk	3	Cable termination.
Uhc	3	Cable support.
Uhd	3	Crossarm mounting bracket.

NOTES:

1. TOTAL ARRESTER LEAD LENGTH MUST BE UNDER 3'.
2. NO BENDS PERMITTED WITHIN 6" OF CABLE TERMINAL BASE.
3. MINIMUM 4" BETWEEN BOLTS.
4. NEUTRAL POSITION MAY VARY.

THREE PHASE CABLE TERMINAL POLE
WITH CUTOUTS AND CROSSARM
MOUNTING ARRESTERS

AUG 2016	3 – PHASE PRIMARY	
RUS		UC1

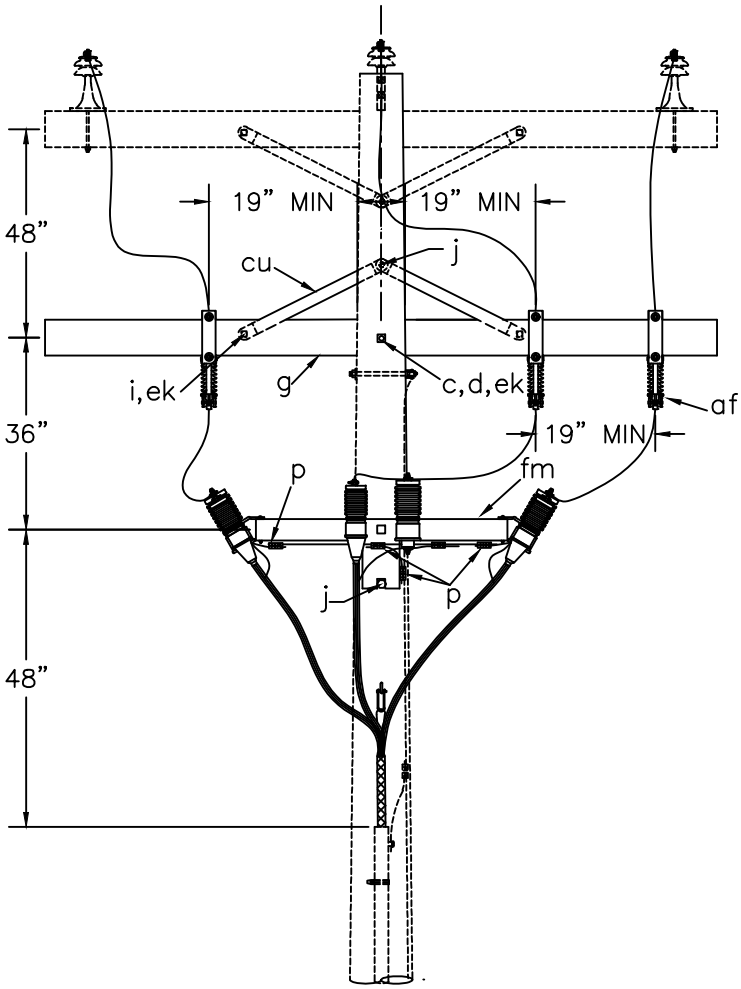

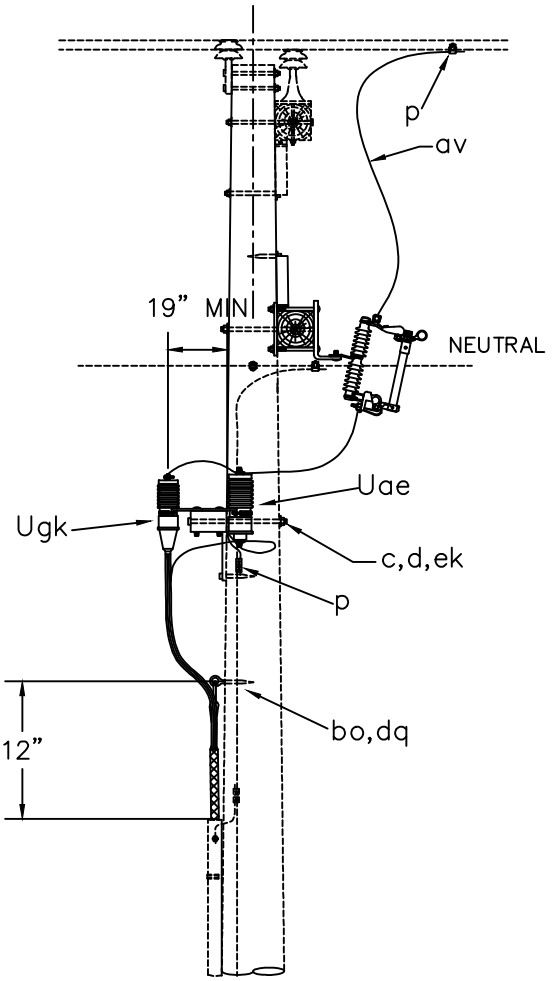

ITEM	QTY.	MATERIAL
c	2	Bolt, machine, 5/8" x required length.
d	4	Washer, square 2 1/4".
g	1	Crossarm, 3 5/8" x 4 5/8" x 8'-0"
i	2	Bolt, carriage, 3/8" x 4 1/2"
j	2	Screw, lag 1/2" x 4" as required.
p		Connectors, as required.
af	2	Cutout
al		Staples, as required.
av		Jumpers, as required.
bo	1	Anchor, shackle.
cu	2	Brace, wood, 28"
dq	1	Eye screw, elliptical or drive hook.
ek	4	Locknuts, as required.
fm	1	Mounting bracket.
Uae	3*	Surge arrester
Ugk	3	Cable termination.
Uhc	3	Cable support.

NOTES:

1. TOTAL ARRESTER LEAD LENGTH MUST BE UNDER 3'.
2. NO BENDS PERMITTED WITHIN 6" OF CABLE TERMINAL BASE.
3. MINIMUM 4" BETWEEN BOLTS.

THREE PHASE CABLE TERMINAL POLE
WITH CUTOUTS AND BRACKET
MOUNTING ARRESTERS

AUG 2016	3 – PHASE PRIMARY	
RUS		UC2

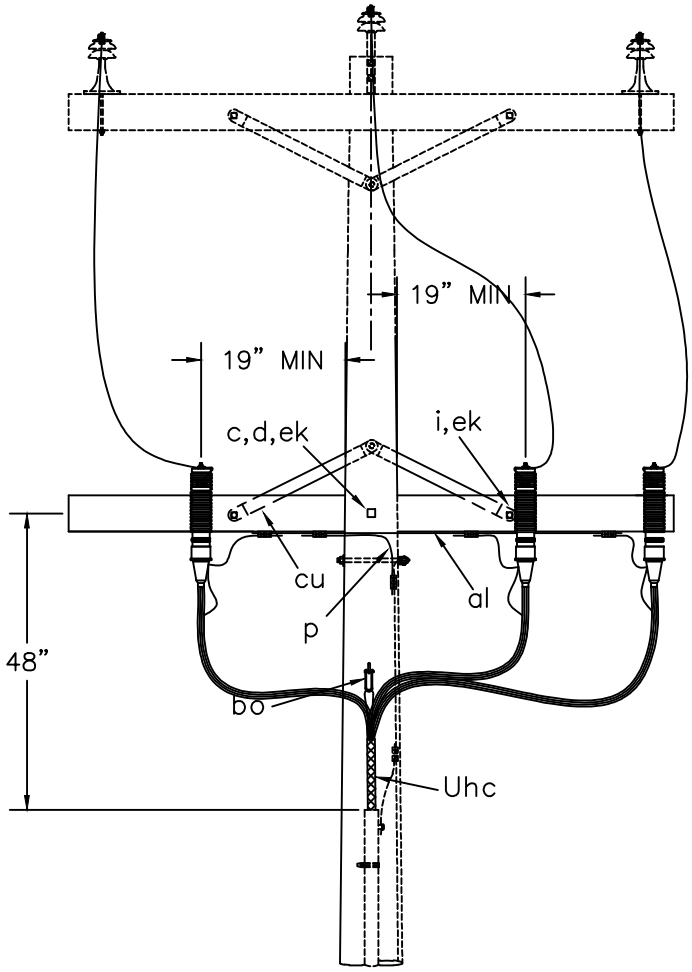

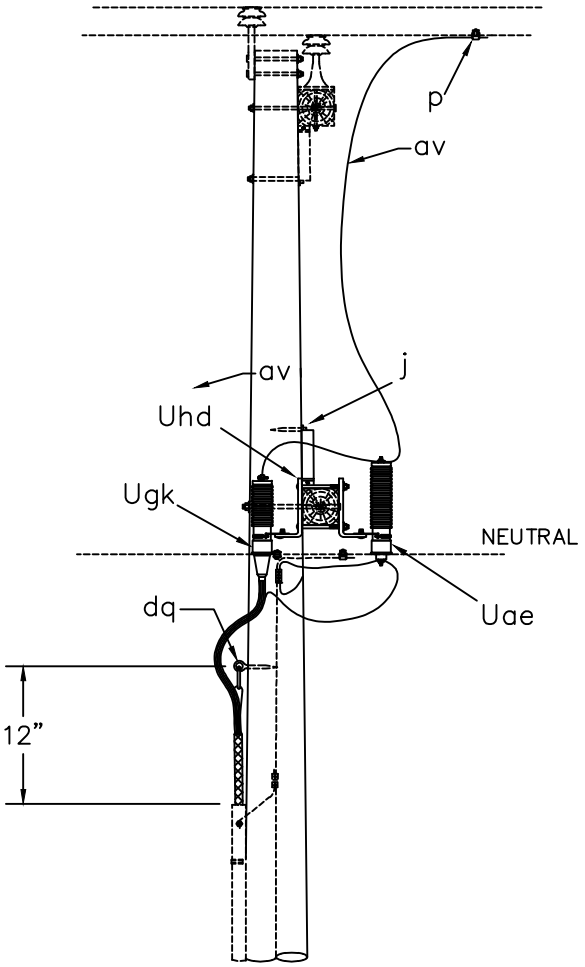

ITEM	QTY.	MATERIAL
c	1	Bolt, machine, 5/8" x required length.
d	2	Washer, square 2 1/4".
g	1	Crossarm, 3 5/8" x 4 5/8" x 8'-0"
i	2	Bolt, carriage, 3/8" x 4 1/2"
j	1	Screw, lag 1/2" x 4" as required.
p		Connectors, as required.
al		Staples, as required.
av		Jumpers, as required.
bo	1	Anchor, shackle.
cu	2	Brace, wood, 28"
dq	1	Eye screw, elliptical or drive hook.
ek	3	Locknuts, as required.
Uae	3*	Surge arrester
Ugk	3	Cable termination.
Uhc	3	Cable support.
Uhd	3	Crossarm mounting bracket.

NOTES:

1. TOTAL ARRESTER LEAD LENGTH MUST BE UNDER 3'.
2. NO BENDS PERMITTED WITHIN 6" OF CABLE TERMINAL BASE.
3. MINIMUM 4" BETWEEN BOLTS.

THREE PHASE CABLE TERMINAL POLE
WITHOUT CUTOUTS AND CROSSARM
MOUNTING ARRESTERS

AUG 2016	3 – PHASE PRIMARY	
RUS		UC3

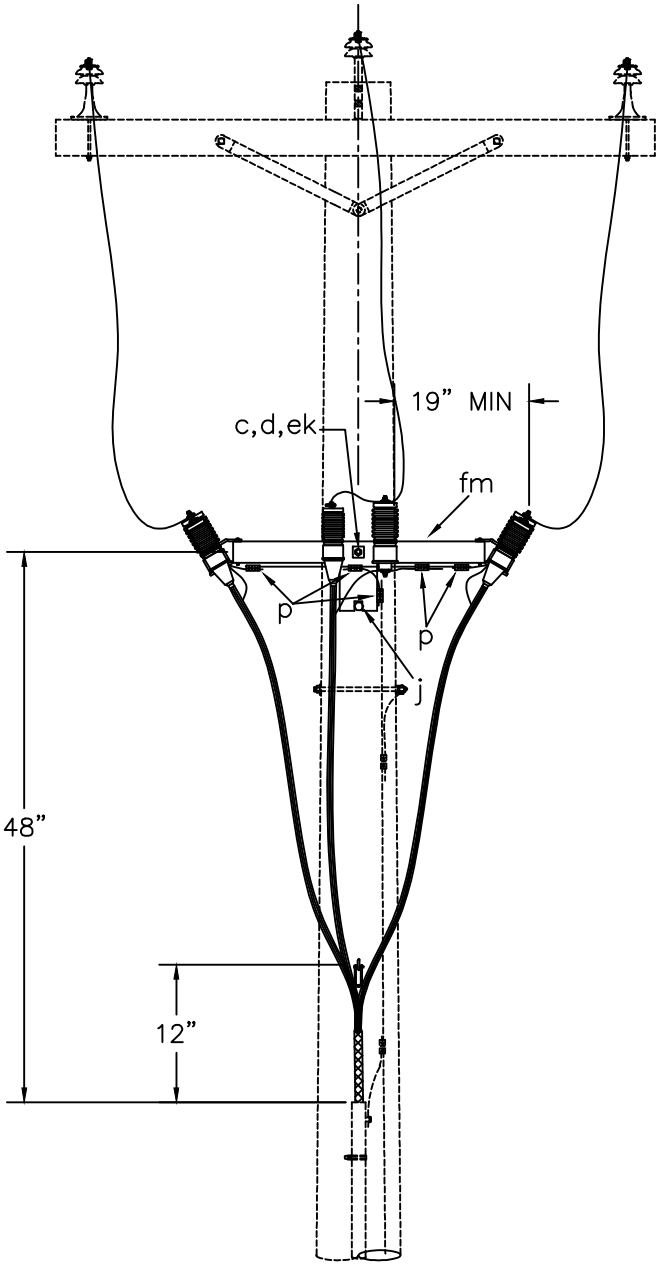

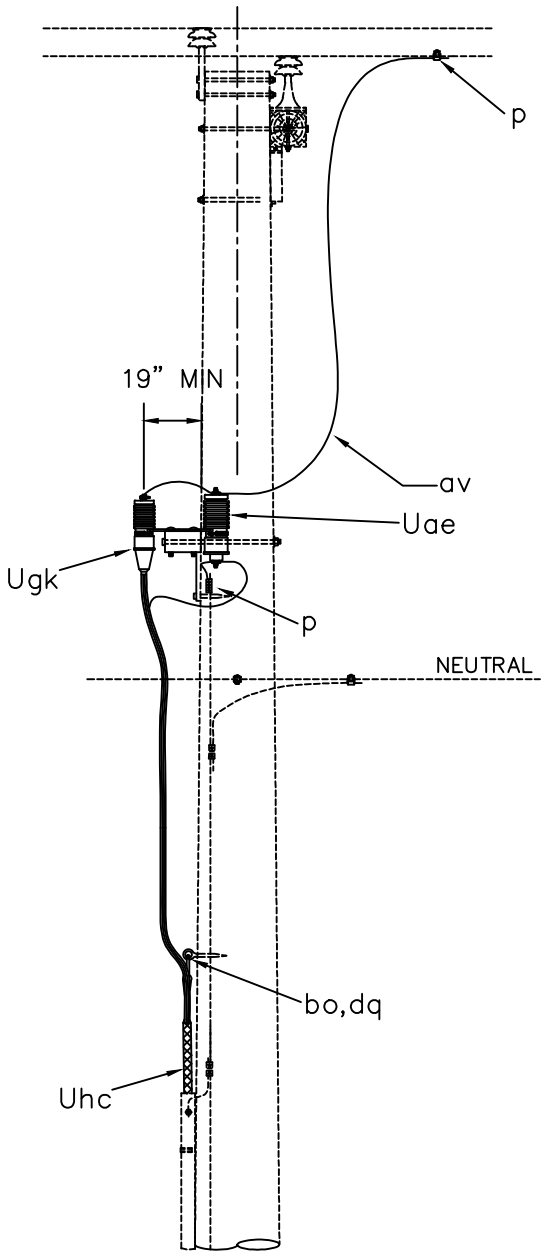

ITEM	QTY.	MATERIAL
c	1	Bolt, machine, 5/8" x required length.
d	2	Washer, square 2 1/4".
j	1	Screw, lag 1/2" x 4" as required.
p		Connectors, as required.
av		Jumpers, as required.
bo	1	Anchor, shackle.
dq	1	Eye screw, elliptical or drive hook.
ek	1	Locknuts, as required.
fm	1	Mounting Bracket.
Uae	3*	Surge arrester
Ugk	3	Cable termination.
Uhc	3	Cable support.

NOTES:

1. TOTAL ARRESTER LEAD LENGTH MUST BE UNDER 3'.
2. NO BENDS PERMITTED WITHIN 6" OF CABLE TERMINAL BASE.
3. MINIMUM 4" BETWEEN BOLTS.

THREE PHASE CABLE TERMINAL POLE
WITHOUT CUTOUTS AND BRACKET
MOUNTING ARRESTERS

AUG 2016	3 – PHASE PRIMARY	
RUS		UC4

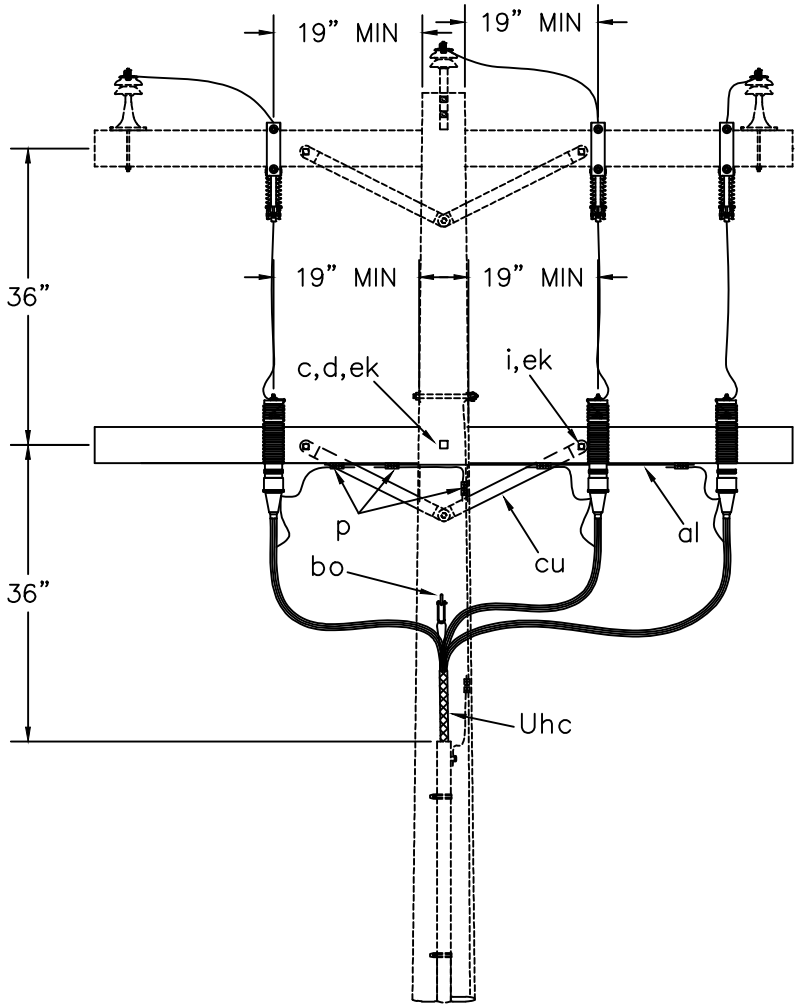

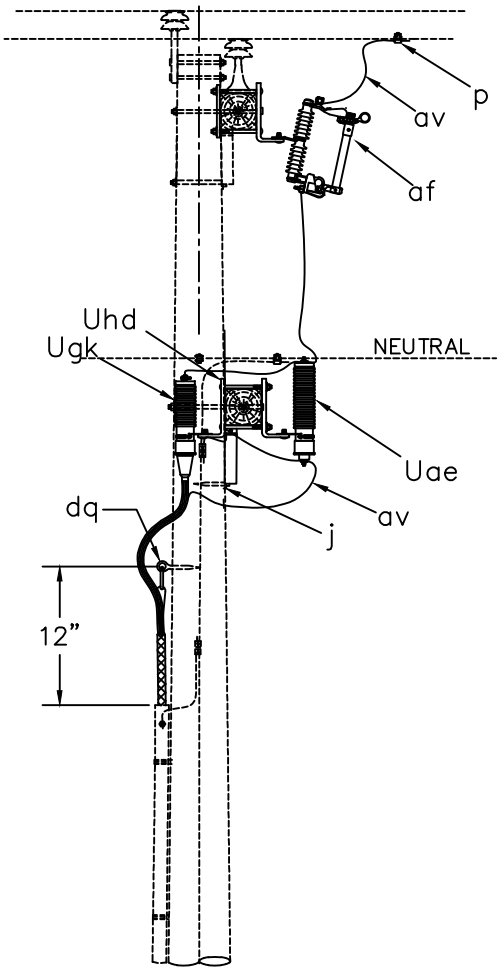

ITEM	QTY.	MATERIAL
c	1	Bolt, machine, 5/8" x required length.
d	2	Washer, square 2 1/4".
g	1	Crossarm, 3 5/8" x 4 5/8" x 8'-0"
i	2	Bolt, carriage, 3/8" x 4 1/2"
j	1	Screw, lag 1/2" x 4" as required.
p		Connectors, as required.
af	3	Cutout
al		Staples, as required.
av		Jumpers, as required.
bo	1	Anchor, shackle.
cu	2	Brace, wood, 28"
dq	1	Eye screw, elliptical or drive hook.
ek	3	Locknuts, as required.
Uae	3*	Surge arrester
Ugk	3	Cable termination.
Uhc	3	Cable support.
Uhd	3	Crossarm mounting bracket.

NOTES:

1. TOTAL ARRESTER LEAD LENGTH MUST BE UNDER 3'.
2. NO BENDS PERMITTED WITHIN 6" OF CABLE TERMINAL BASE.
3. MINIMUM 4" BETWEEN BOLTS.

THREE PHASE CABLE TERMINAL POLE
WITH UPPER CROSSARM MOUNTING CUTOUTS
AND CROSSARM MOUNTING ARRESTERS

AUG 2016	3 – PHASE PRIMARY	
RUS		UC5

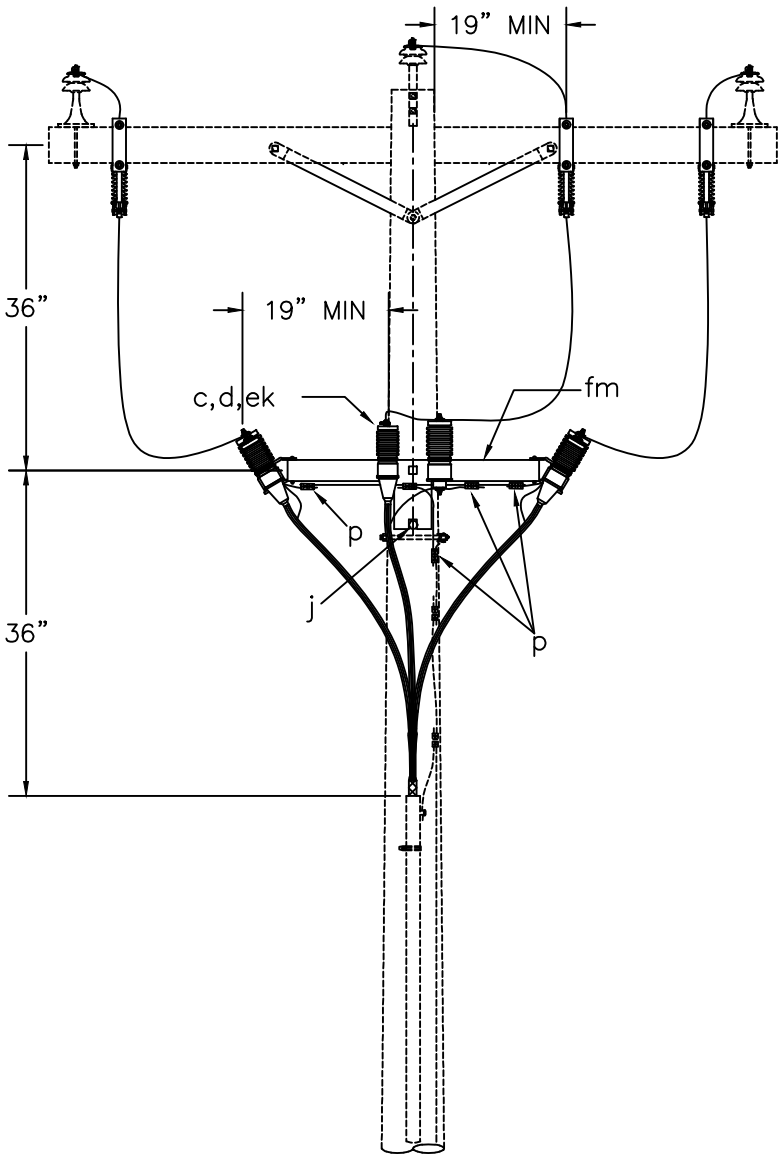

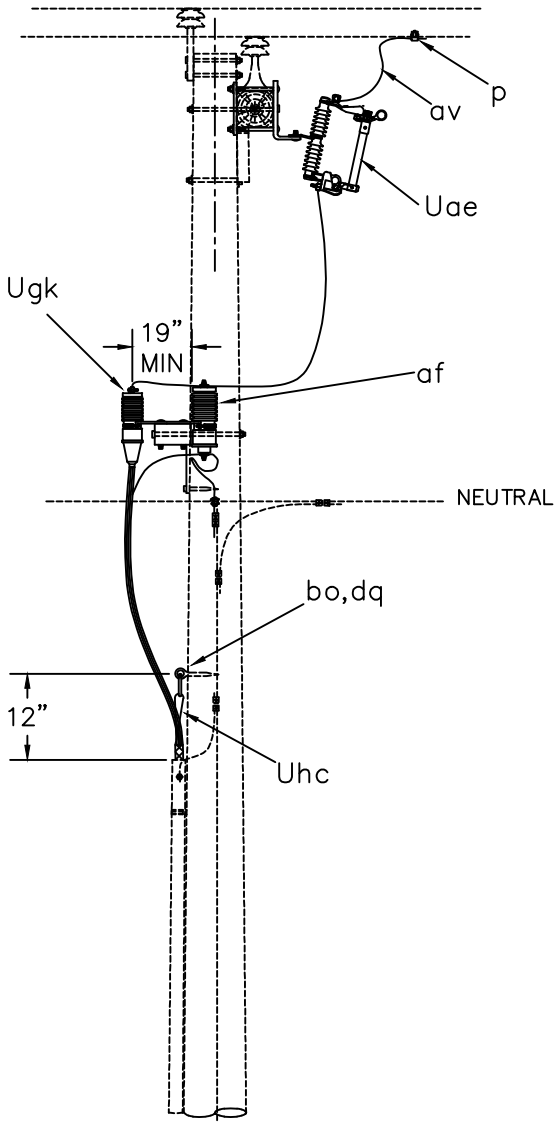

ITEM	QTY.	MATERIAL
c	1	Bolt, machine, 5/8" x required length.
d	2	Washer, square 2 1/4".
j	1	Screw, lag 1/2" x 4" as required.
p		Connectors, as required.
af	3	Cutout
av		Jumpers, as required.
bo	1	Anchor, shackle.
ek	1	Locknuts, as required.
fm	1	Mounting bracket.
dq	1	Eye screw, elliptical or drive hook.
Uae	3*	Surge arrester
Ugk	3	Cable termination.
Uhc	3	Cable support.

NOTES:

1. TOTAL ARRESTER LEAD LENGTH MUST BE UNDER 3'.
2. NO BENDS PERMITTED WITHIN 6" OF CABLE TERMINAL BASE.
3. MINIMUM 4" BETWEEN BOLTS.
4. THIS UNIT ALLOWS MORE ROOM FOR COMMUNICATIONS ATTACHMENTS.

THREE PHASE CABLE TERMINAL POLE
WITH UPPER CROSSARM MOUNTING CUTOUTS
AND BRACKET MOUNTING ARRESTERS

AUG 2016	3 – PHASE PRIMARY	
RUS		UC6

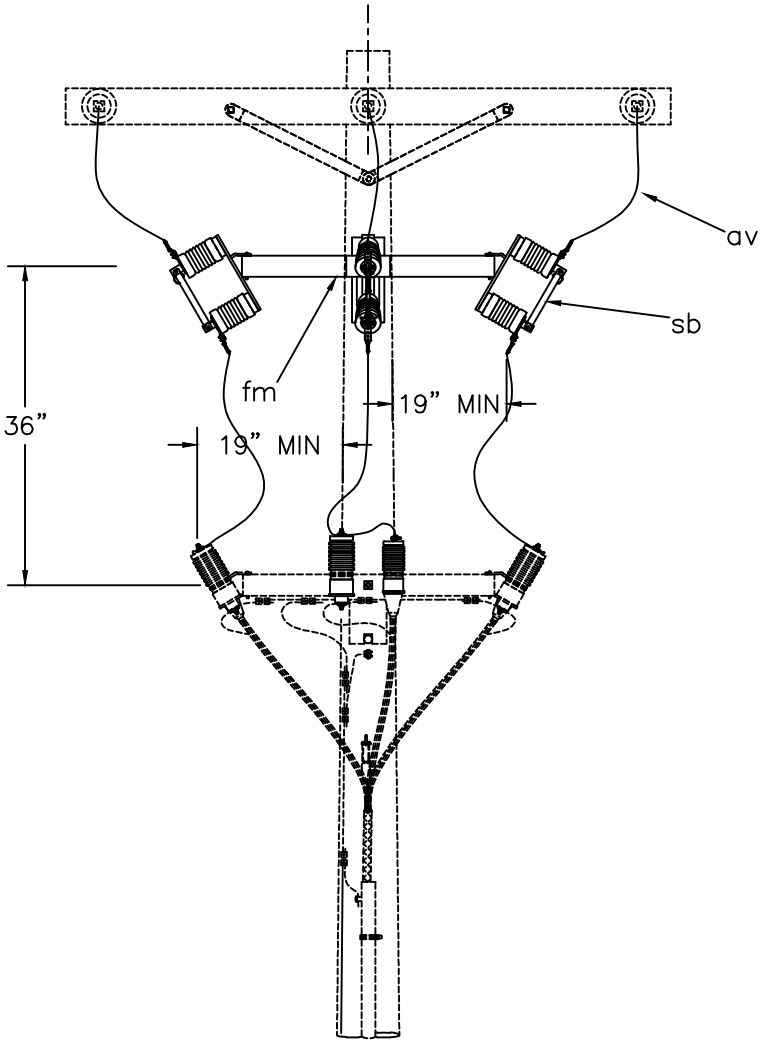

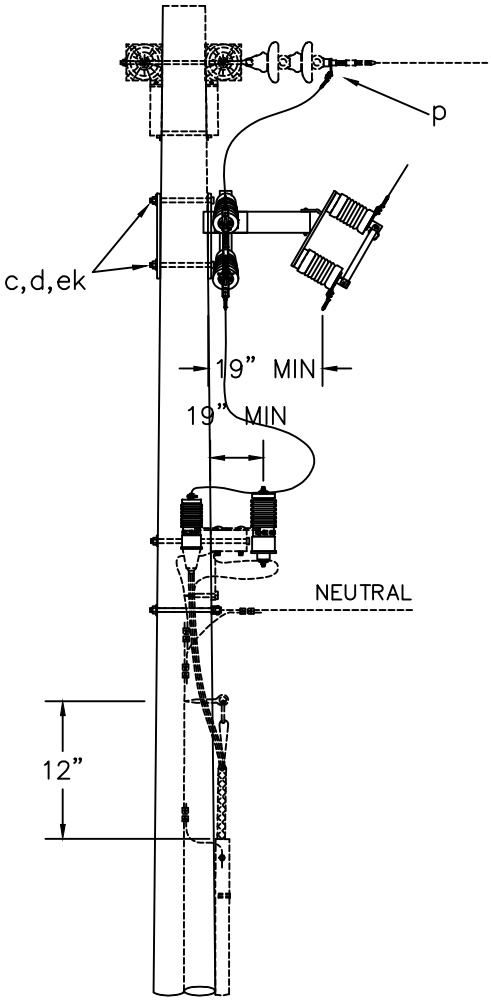

NOTES:

1. TOTAL ARRESTER LEAD LENGTH MUST BE UNDER 3’.
2. NO BENDS PERMITTED WITHIN 6” OF CABLE TERMINAL BASE.
3. MINIMUM 4” BETWEEN BOLTS.

ITEM	QTY.	MATERIAL
c	2	Bolt, machine, 5/8” x required length.
d	4	Washer, square 2 1/4”.
p		Connectors, as required.
av		Jumpers, as required.
ek	2	Locknuts, as required.
fm	1	Mounting bracket
sb	3	Disconnect, 600 A load break.

BRACKET MOUNTED SWITCHES

AUG 2016	3 – PHASE PRIMARY	
RUS		UC7.1

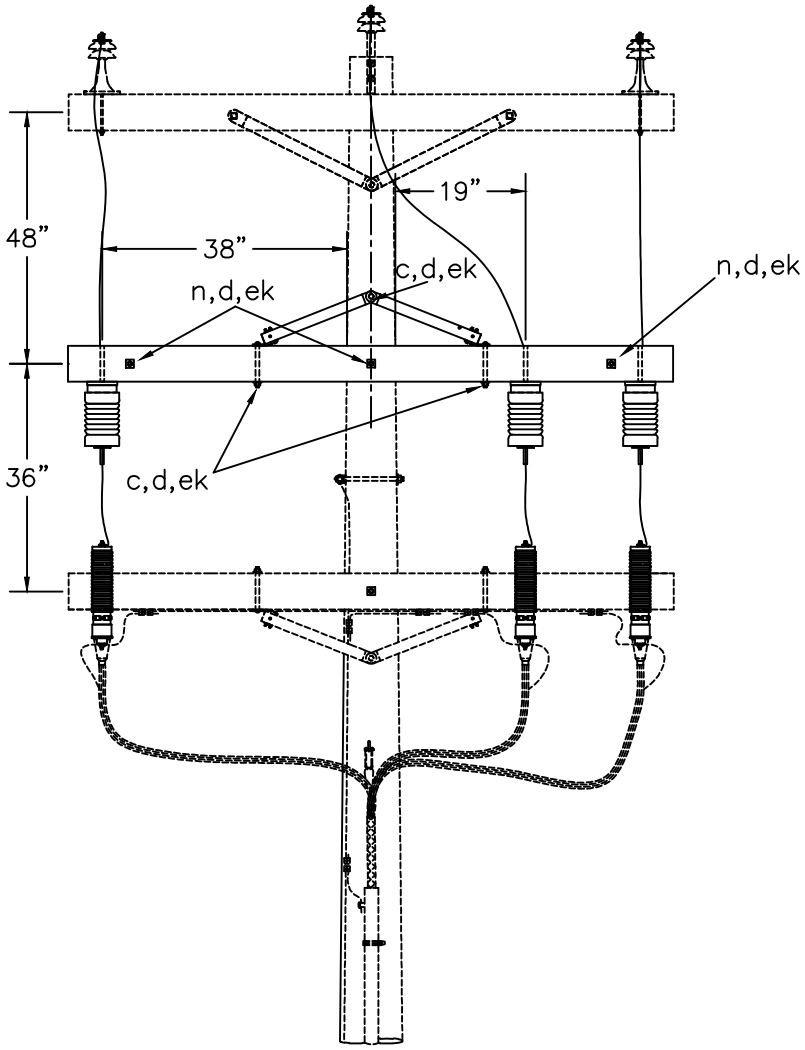

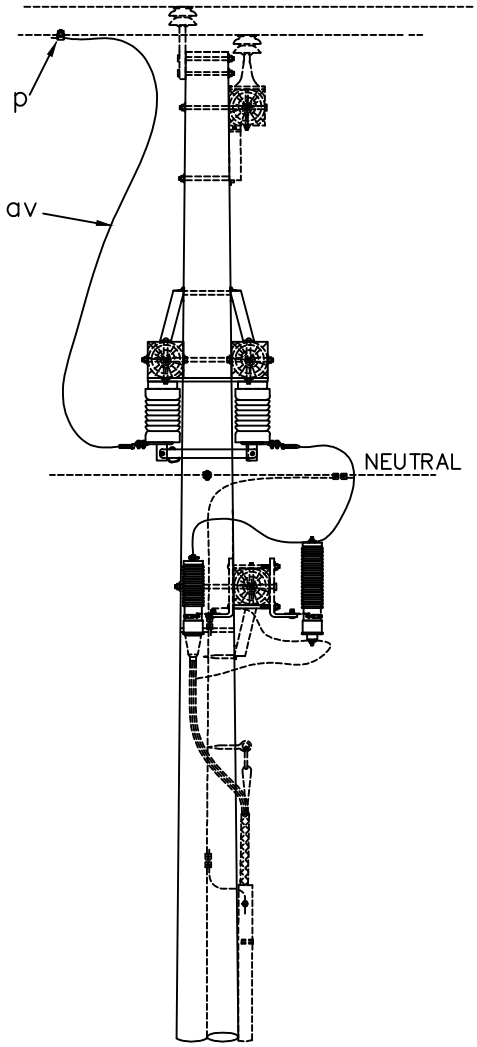

ITEM	QTY.	MATERIAL
c	4	Bolt, machine, 1/2" x required length.
c	1	Bolt, machine, 5/8" x required length.
d	4	Washer, 1 3/8" x 9/16" round.
d	11	Washer, square 2 1/4".
g	2	Crossarm, 3 5/8" x 4 5/8" x 8'-0"
n	3	Bolt, double arming, 5/8" x req'd length.
p		Connectors, as required.
av		Jumpers, as required.
cu	4	Brace, crossarm 60" span.
ek	15	Locknuts, as required.
sb	3	Disconnect, 600 A load break.

NOTES:

1. TOTAL ARRESTER LEAD LENGTH MUST BE UNDER 3'.
2. NO BENDS PERMITTED WITHIN 6" OF CABLE TERMINAL BASE.
3. MINIMUM 4" BETWEEN BOLTS.

HORIZONTAL MOUNTED SWITCHES

AUG 2016	3 – PHASE PRIMARY	
RUS		UC7.2

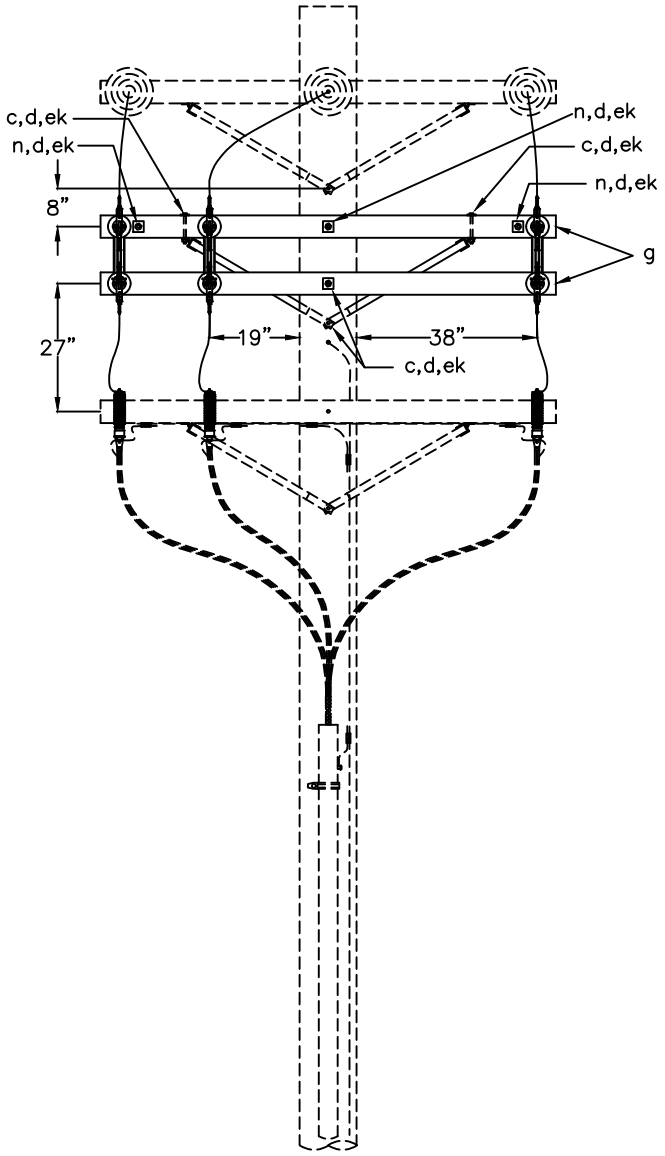

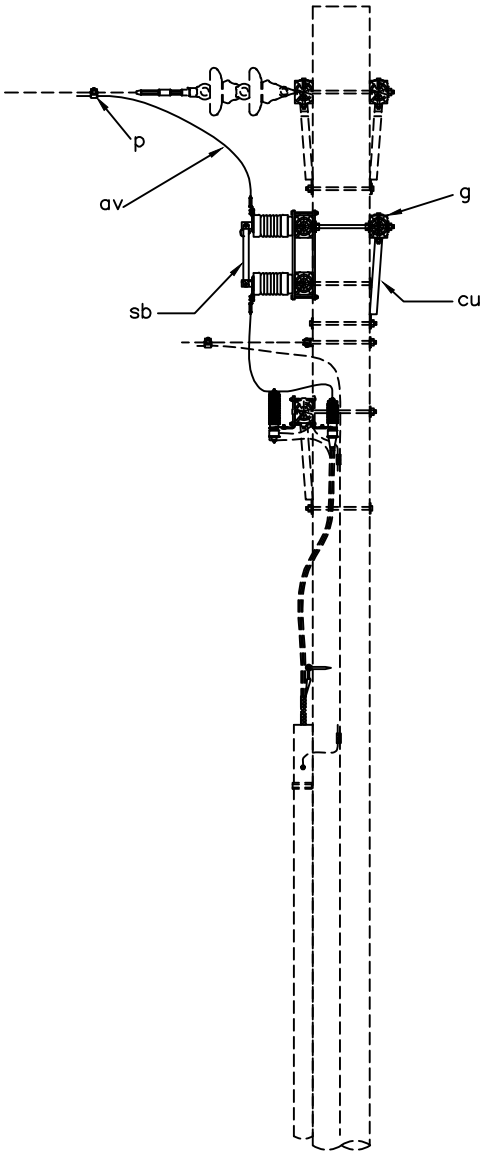

ITEM	QTY.	MATERIAL
c	2	Bolt, machine, 1/2" x required length.
c	2	Bolt, machine, 5/8" x required length.
d	2	Washer, 1 3/8" x 9/16" round.
d	13	Washer, square 2 1/4".
g	3	Crossarm, 3 5/8" x 4 5/8" x 8'–0"
n	3	Bolt, double arming, 5/8" x req'd length.
p		Connectors, as required.
av		Jumpers, as required.
cu	2	Brace, crossarm 60" span.
ek	14	Locknuts, as required.
sb	3	Disconnect, 600 A load break.

NOTES:

1. TOTAL ARRESTER LEAD LENGTH MUST BE UNDER 3'.
2. NO BENDS PERMITTED WITHIN 6" OF CABLE TERMINAL BASE.
3. MINIMUM 4" BETWEEN BOLTS.

VERTICAL SWITCHES MOUNTED ON THREE CROSSARMS

AUG 2016	3 – PHASE PRIMARY	
RUS		UC7.3

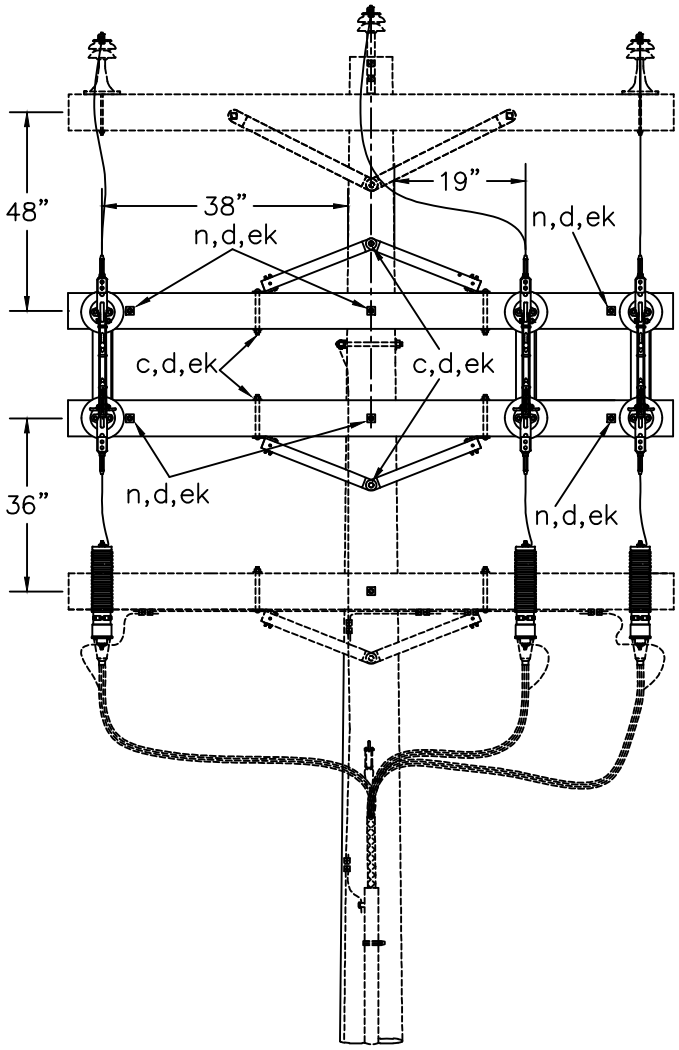

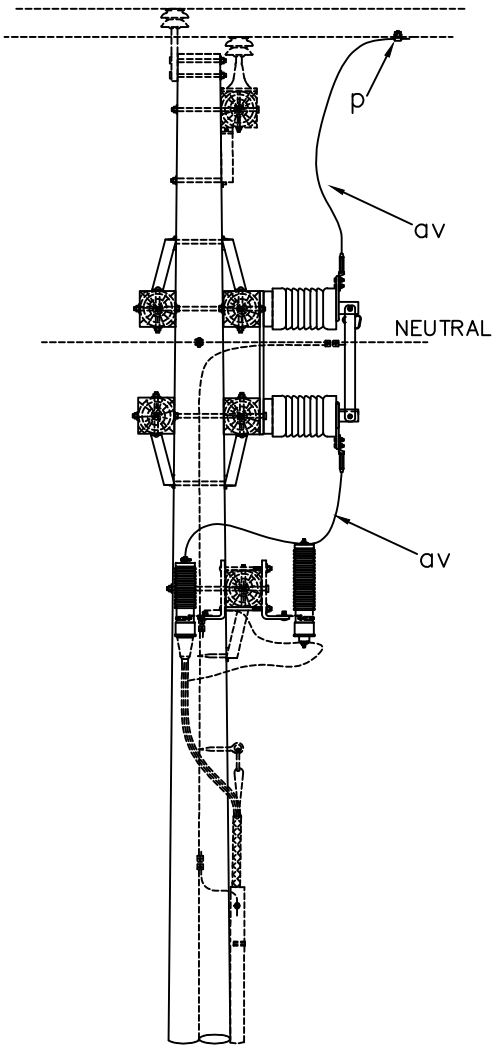

ITEM	QTY.	MATERIAL
c	8	Bolt, machine, 1/2" x required length.
c	2	Bolt, machine, 5/8" x required length.
d	8	Washer, 1 3/8" x 9/16" round.
d	22	Washer, square 2 1/4".
g	4	Crossarm, 3 5/8" x 4 5/8" x 8'–0"
n	6	Bolt, double arming, 5/8" x req'd length.
p		Connectors, as required.
av		Jumpers, as required.
cu	4	Brace, crossarm 60" span.
ek	30	Locknuts, as required.
sb	3	Disconnect, 600 A load break.

NOTES:

1. TOTAL ARRESTER LEAD LENGTH MUST BE UNDER 3'.
2. NO BENDS PERMITTED WITHIN 6" OF CABLE TERMINAL BASE.
3. MINIMUM 4" BETWEEN BOLTS.

VERTICAL SWITCHES MOUNTED ON FOUR CROSSARMS

AUG 2016	3 – PHASE PRIMARY	
RUS		UC7.4

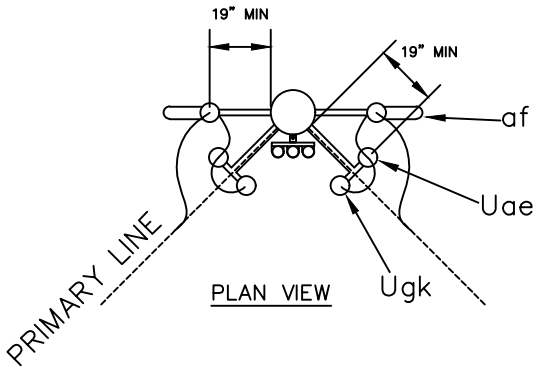

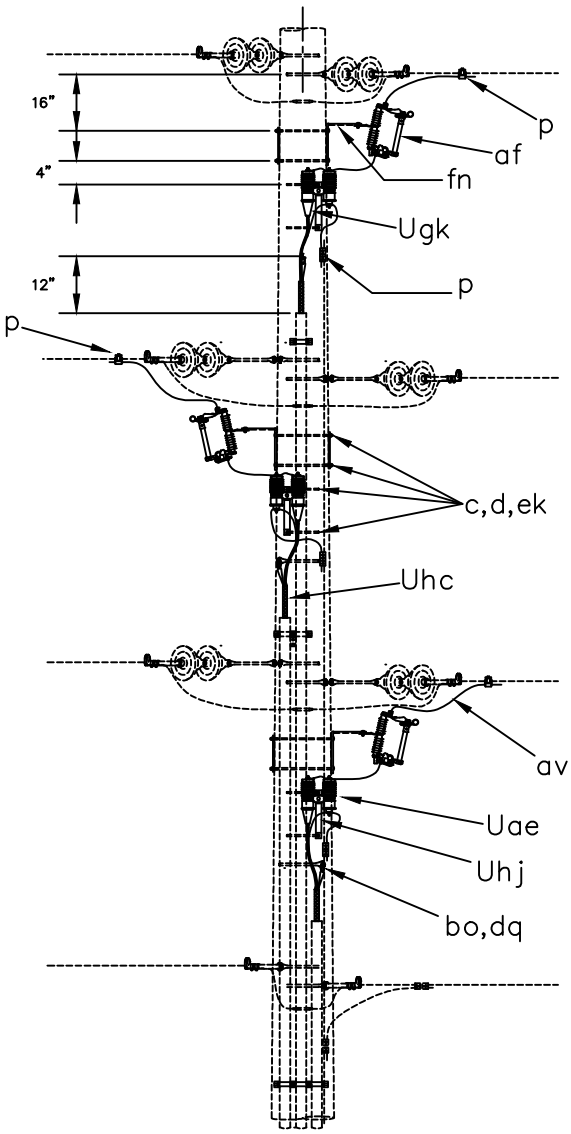

ITEM	QTY.	MATERIAL
c	12	Bolt, machine, 5/8" x required length.
d	12	Washer, square 2 1/4".
p		Connectors, as required.
af	3	Fuse link.
af	3	Cutout
av		Jumpers, as required.
bo	3	Anchor, shackle.
dq	3	Eye screw, elliptical or drive hook.
ek	12	Locknuts
fn	3	Bracket, cutout extension.
Uae	3*	Surge arrester
Ugk	3	Cable termination.
Uhc	3	Cable support.
Uhj	3	Bracket combination.

NOTES:

1. TOTAL ARRESTER LEAD LENGTH MUST BE UNDER 3'.
2. NO BENDS PERMITTED WITHIN 6" OF CABLE TERMINAL BASE.
3. MINIMUM 4" BETWEEN BOLTS.

THREE PHASE CABLE TERMINAL POLE
WITH VERTICAL FRAMING AND
TWO BRACKETS PER PHASE

AUG 2016	3 – PHASE PRIMARY	
RUS		UC8.1

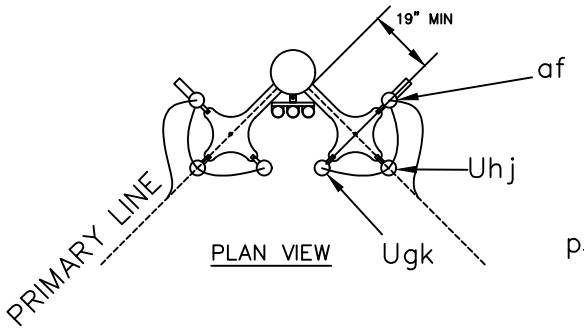

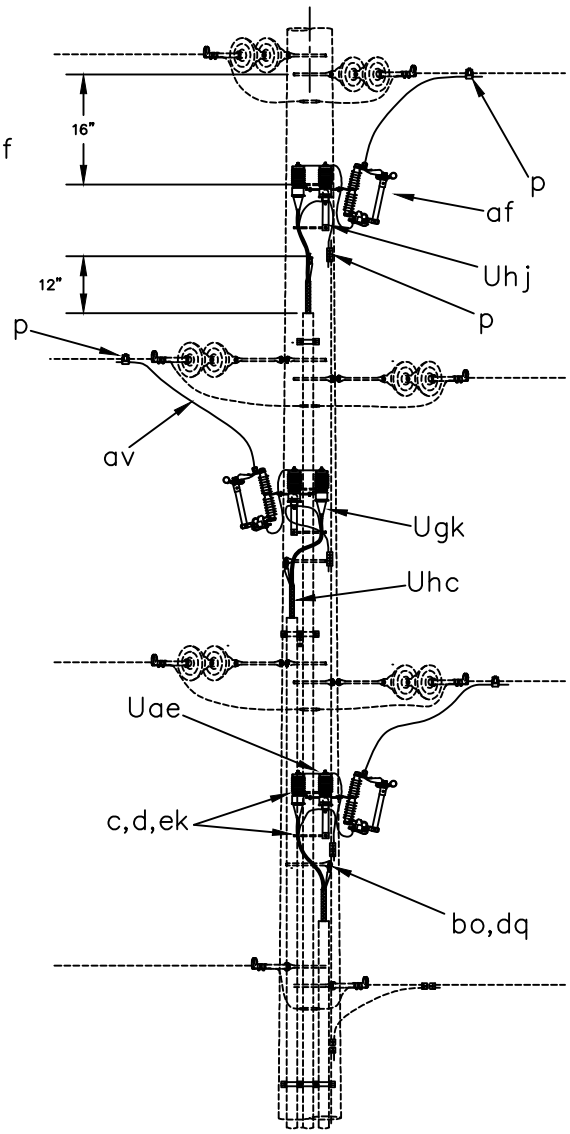

ITEM	QTY.	MATERIAL
c	6	Bolt, machine, 5/8" x required length.
d	6	Washer, square 2 1/4".
p		Connectors, as required.
af	3	Fuse link.
af	3	Cutout
av		Jumpers, as required.
bo	3	Anchor, shackle.
dq	3	Eye screw, elliptical or drive hook.
ek	6	Locknuts
Uae	3*	Surge arrester
Ugk	3	Cable termination.
Uhc	3	Cable support.
Uhj	3	Bracket combination.

NOTES:

1. TOTAL ARRESTER LEAD LENGTH MUST BE UNDER 3'.
2. NO BENDS PERMITTED WITHIN 6" OF CABLE TERMINAL BASE.
3. MINIMUM 4" BETWEEN BOLTS.

THREE PHASE CABLE TERMINAL POLE
WITH VERTICAL FRAMING AND
ONE BRACKET PER PHASE

AUG 2016	3 – PHASE PRIMARY	
RUS		UC8.2

FOUNDATION ASSEMBLY UNITS

DRAWING NUMBERS		**DRAWING TITLE (DESCRIPTION)**
1728F-806 (New)	**1728F-806** (Old)	
		PRIMARY PULL BOX UNDERGROUND CABLE
UF.PBC		CONRETE PRIMARY PULL BOX
UF.PBN		NON-CONRETE PRIMARY PULL BOX
		SINGLE PHASE EQUIPMENT FOUNDATIONS
UF1.BC	(UM1-7C)	CONRETE BOX PAD FOR SINGLE PHASE EQUIPMENT
UF1.BN	(UM1-7NC)	NON-CONCRETE BOX PAD FOR SINGLE PHASE EQUIPMENT
		SINGLE PHASE AND THREE PHASE EQUIPMENT FOUNDATIONS
UF1.PC	(UM1-5C)	CONCRETE PAD FOR SINGLE PHASE EQUIPMENT
UF1.PN	(UM1-5NC)	NON-CONCRETE PAD FOR SINGLE PHASE EQUIPMENT
UF3.PN		NON-CONCRETE PAD FOR THREE PHASE EQUIPMENT
		THREE PHASE EQUIPMENT FOUNDATIONS
UF3.BC		CONCRETE BOX PAD FOR THREE PHASE EQUIPMENT
UF3.BN		NON-CONCRETE BOX PAD FOR THREE PHASE EQUIPMENT
UF3.VC		CONCRETE VAULT FOR THREE PHASE EQUIPMENT
UF3.PC	(UM1-6C)	CONCRETE PAD FOR THREE PHASE EQUIPMENT

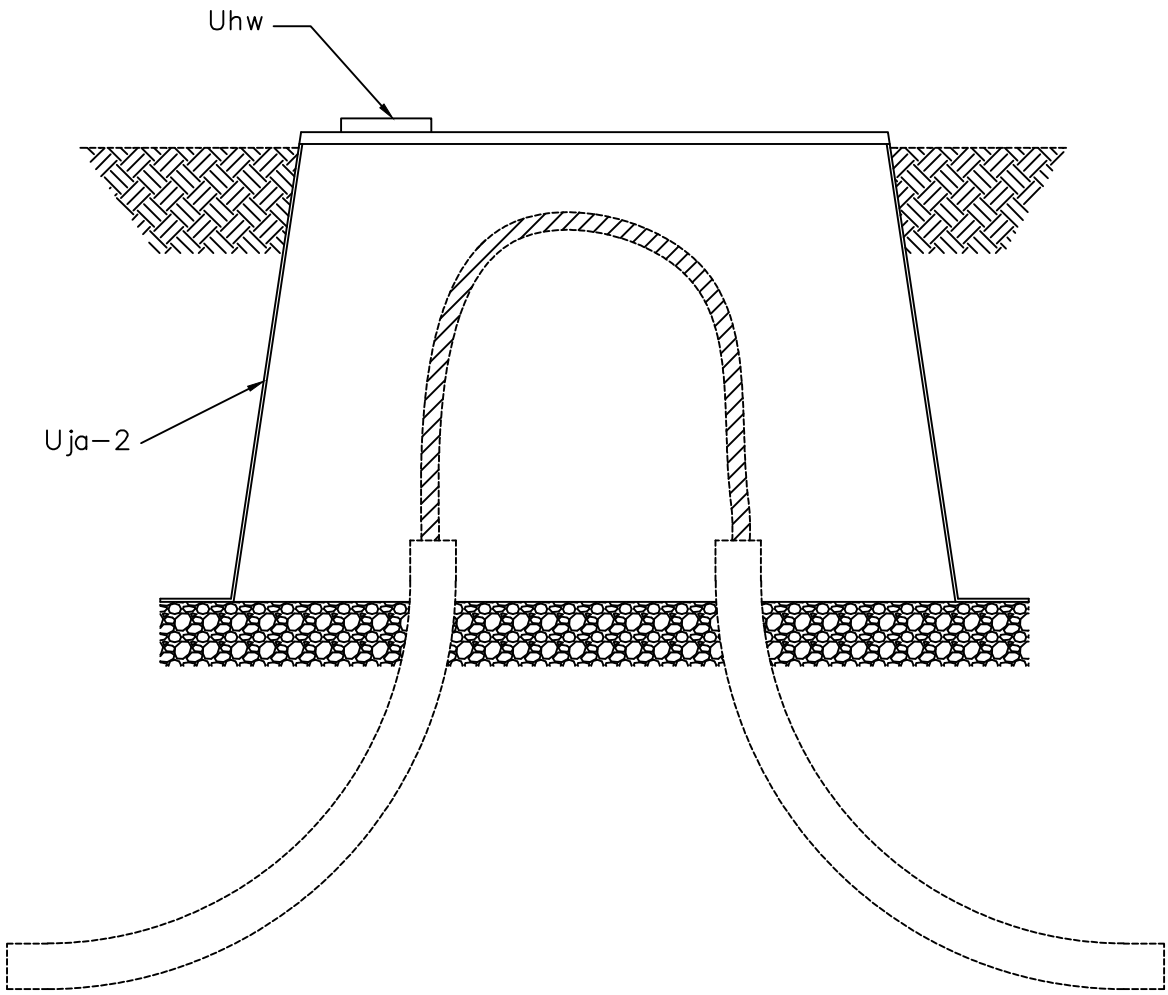

ITEM	MATERIAL	UF.PBC	UF.PBN
Uja–2	Equipment Box Pad, concrete	1	
Uja–2	Equipment Box Pad, non–concrete		1
Uhw	Safety signs	1	1

NOTES:

1. COVER, IF METAL, SHALL BE GROUNDED.

PRIMARY PULL BOX
UNDERGROUND CABLE

AUG 2016

RUS

UF.PBC
UF.PBN

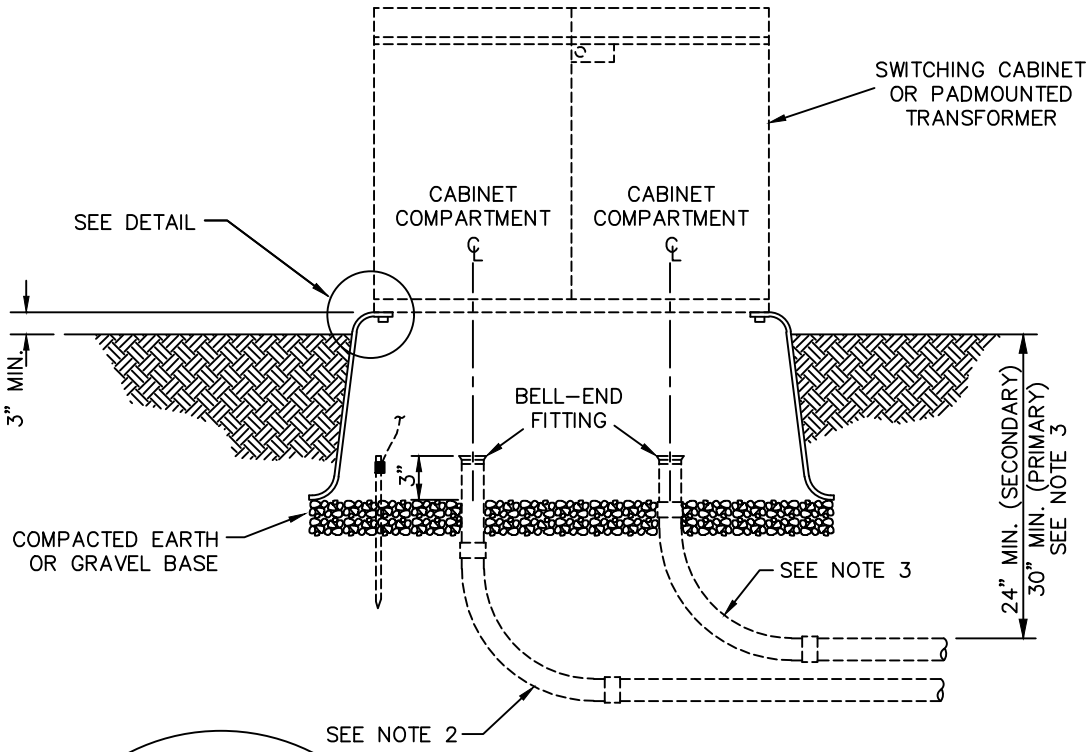

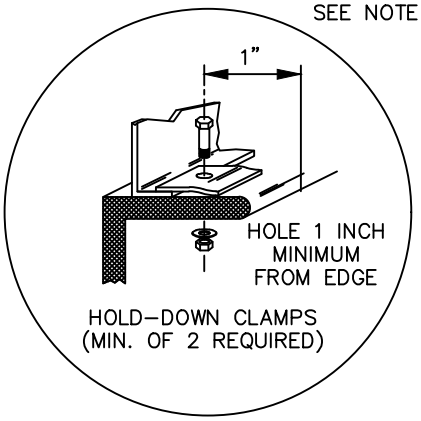

DETAIL

NOTES:

1. UNIT MAY CONSIST OF A ONE-PIECE UNIT OR FOUR SEPARATE WALL SECTIONS.
2. NON-METALLIC SWEEPS SHOULD BE STABILIZED WITH CONCRETE ENCASEMENT IF PULLING TENSIONS DICTATE.
3. LARGER RADIUS SWEEPS, WHICH MAY BE REQUIRED BY PULLING TENSIONS, MAY INCREASE BURIAL DEPTHS.

UNIT DESIGNATION:

UF1.BC	CONCRETE BOX PAD FOR SINGLE PHASE EQUIPMENT
UF1.BN	NON-CONCRETE BOX PAD FOR SINGLE PHASE EQUIPMENT

ITEM	QTY.	MATERIAL
Uja-2	1	Equipment Box Pad

SINGLE PHASE
EQUIPMENT FOUNDATIONS

AUG 2016	1 - PHASE PRIMARY	UF1.BC
RUS		UF1.BN

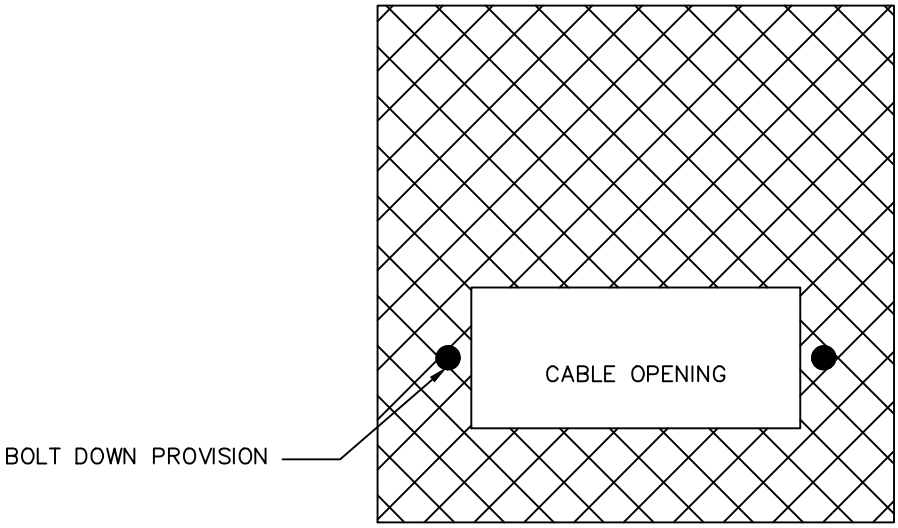

NOTES:

1. PAD ASSEMBLIES INCLUDE SITE PREPARATION, BEDDING AND DRAINAGE.
2. EQUIPMENT SHALL BE SECURED TO PAD IN ACCORDANCE WITH MANUFACTURERS INSTRUCTIONS.
3. CABLE OPENING AND PAD DIMENSIONS SHALL BE AS REQUIRED.

UNIT DESIGNATION:

UF1.PC	CONCRETE PAD FOR SINGLE PHASE EQUIPMENT
UF1.PN	NON–CONCRETE PAD FOR SINGLE PHASE EQUIPMENT
UF3.PN	NON–CONCRETE PAD FOR THREE PHASE EQUIPMENT

ITEM	MATERIAL	UF1.PC	UF1.PN	UF3.PN
Uja–1	Transformer concrete pad	1		
Uja–1	Transformer non–concrete pad		1	1

SINGLE PHASE AND THREE PHASE
EQUIPMENT FOUNDATIONS

AUG 2016

RUS

UF1.PC,UF1.PN
UF3.PN

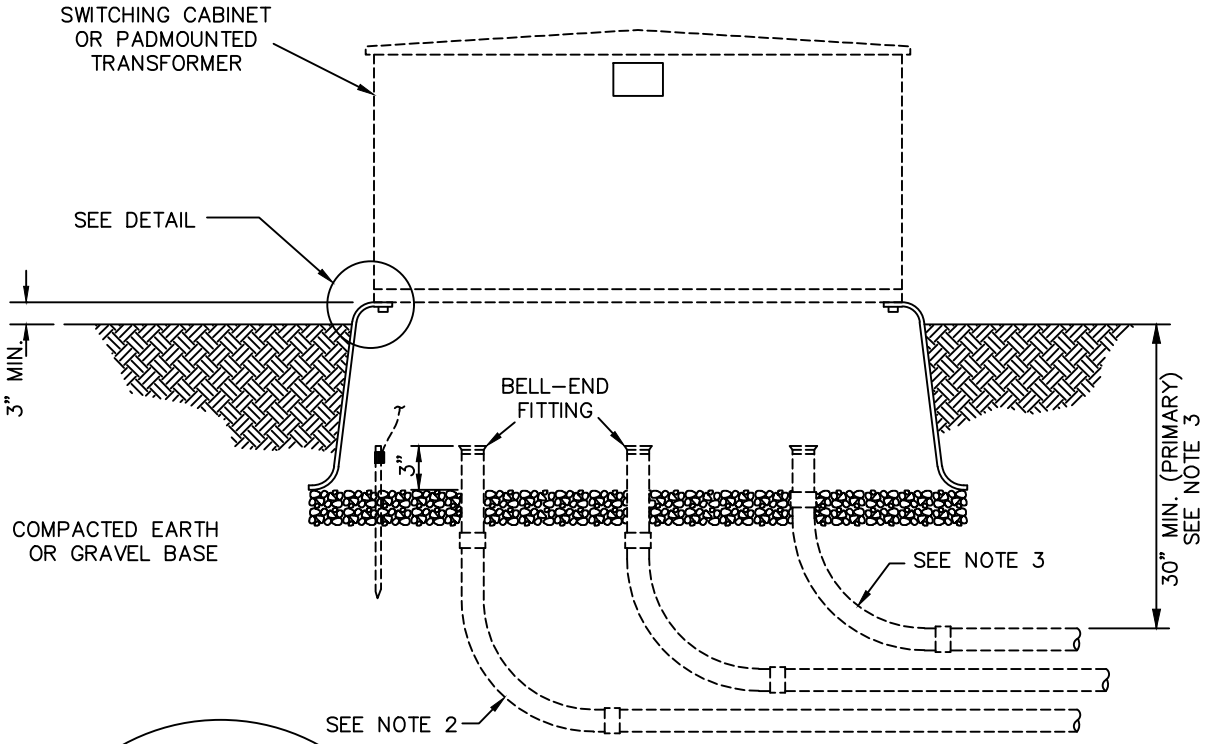

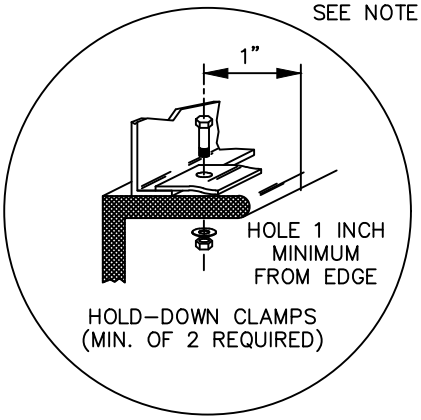

DETAIL

NOTES:

1. UNIT MAY CONSIST OF A ONE-PIECE UNIT OR FOUR SEPARATE WALL SECTIONS.
2. NON-METALLIC SWEEPS SHOULD BE STABILIZED WITH CONCRETE ENCASEMENT IF PULLING TENSIONS DICTATE.
3. LARGER RADIUS SWEEPS, WHICH MAY BE REQUIRED BY PULLING TENSIONS, MAY INCREASE BURIAL DEPTHS.

UNIT DESIGNATION:

UF3.BC	CONCRETE BOX PAD FOR THREE PHASE EQUIPMENT
UF3.BN	NON-CONCRETE BOX PAD FOR THREE PHASE EQUIPMENT
UF3.VC	CONCRETE VAULT FOR THREE PHASE EQUIPMENT (UNIT NOT SHOWN, REQUIRES SPECIFIC DESIGN)

ITEM	QTY.	MATERIAL
Uja-2	1	Equipment Box Pad

THREE PHASE
EQUIPMENT FOUNDATIONS

AUG 2016	3 – PHASE PRIMARY	UF3.BC,UF3.BN
RUS		UF3.VC

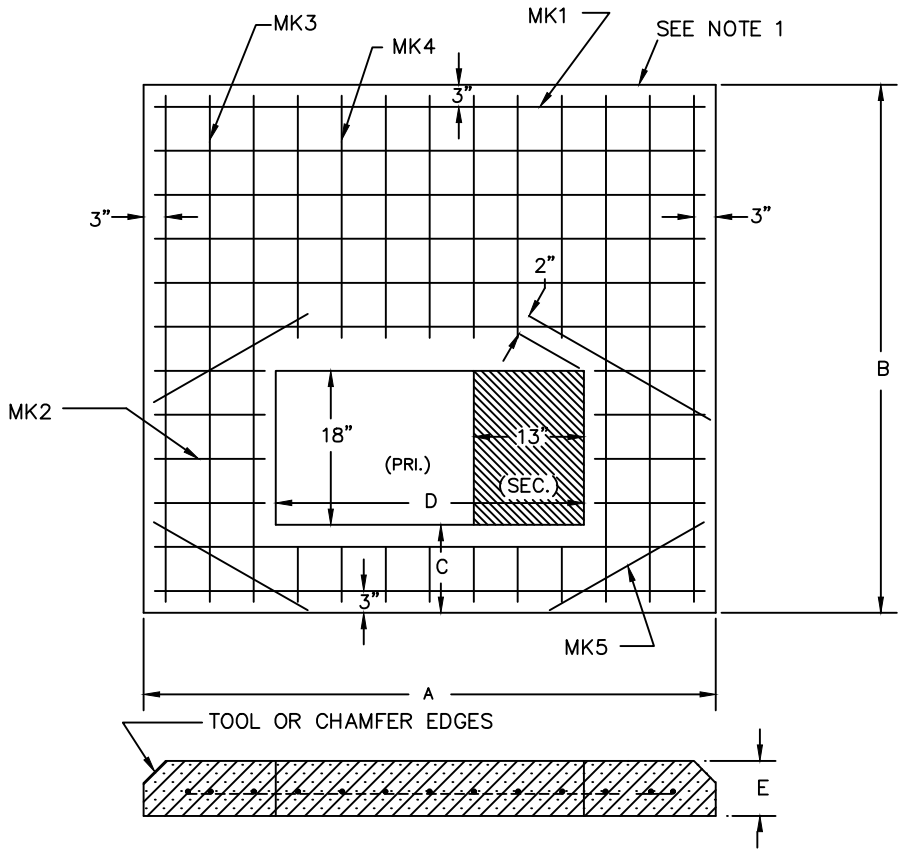

PAD	3–PHASE TRANSF. kVA	DIMENSIONS IN INCHES					REINFORCING BARS				
		A	B	C	D	E	MK1	MK2	MK3	MK4	MK5
#1	75, 112 1/2, 150, 225, 300, 500	76	62	10	42	6	7 #4 70"	4 #4 10"	6 #4 57"	6 #4 28"	4 #4 26"
#2	750, 1000 1500, 2500	104	100	10	54	8	12 #4 98"	6 #4 19"	6 #4 94"	7 #4 66"	4 #4 29"

NOTES:

1. CONCRETE TESTING, 3000 POUNDS MIN. PER SQUARE INCH; 4% TO 6% ENTRAINED AIR, 3/4" MAXIMUM SIZE AGGREGATE.
2. REINFORCING STEEL, ATSM–A615 GRADE 60, PLACE APPROX. 6" O.C. EACH WAY AND SECURELY TIED.
3. MINIMUM CONCRETE COVER OVER REINFORCING STEEL 2 INCHES UNLESS NOTED.
4. WOOD FLOAT FINISH, LEAVING NO DEPRESSIONS.
5. PAD DIMENSION AND REBAR SPACING SHALL BE ADJUSTED TO HANDLE TRANSFORMER SIZE AND WEIGHT.

ITEM	QTY.	MATERIAL
		Concrete, as required
		Reinforcing bar, as required

CONCRETE PAD FOR
THREE PHASE EQUIPMENT

AUG 2016	3 – PHASE PRIMARY	
RUS		UF3.PC

TRANSFORMER ASSEMBLY UNITS

DRAWING NUMBERS		DRAWING TITLE (DESCRIPTION)
1728F-806 (New)	**1728F-806** (Old)	
		SINGLE PHASE ONE BUSHING PADMOUNTED TRANSFORMER (RADIAL FEED)
UG1.01		SINGLE PHASE ONE BUSHING PADMOUNTED TRANSFORMER ONLY
UG1.1	(UG6)	RADIAL TYPE SINGLE PHASE ONE BUSHING PADMOUNTED TRANSFORMER
UG1.2		SINGLE PHASE TWO BUSHING PADMOUNTED TRANSFORMER (RADIAL FEED)
		SINGLE PHASE TWO BUSHING PADMOUNTED TRANSFORMER (LOOP FEED)
UG1.02		SINGLE PHASE TWO BUSHING PADMOUNTED TRANSFORMER ONLY
UG1.3	(UG7)	LOOP TYPE SINGLE PHASE TWO BUSHING PADMOUNTED TRANSFORMER
UG2.1	(UX1)	OPEN DELTA CONNECTION WITH SINGLE PHASE PADMOUNTED TRANSFORMERS
		THREE PHASE THREE BUSHING PADMOUNTED TRANSFORMER (RADIAL FEED)
UG3.01		THREE PHASE THREE BUSHING PADMOUNTED TRANSFORMER ONLY
UG3.1	(UG17)	RADIAL TYPE THREE PHASE THREE BUSHING PADMOUNTED TRANSFORMER
UG3.2	(UG17-3)	THREE PHASE SIX BUSHING PADMOUNTED TRANSFORMER (RADIAL FEED)
		THREE PHASE SIX BUSHING PADMOUNTED TRANSFORMER (LOOP FEED)
UG3.02		THREE PHASE SIX BUSHING PADMOUNTED TRANSFORMER ONLY
UG3.3	(UG17-2)	LOOP TYPE THREE PHASE SIX BUSHING PADMOUNTED TRANSFORMER

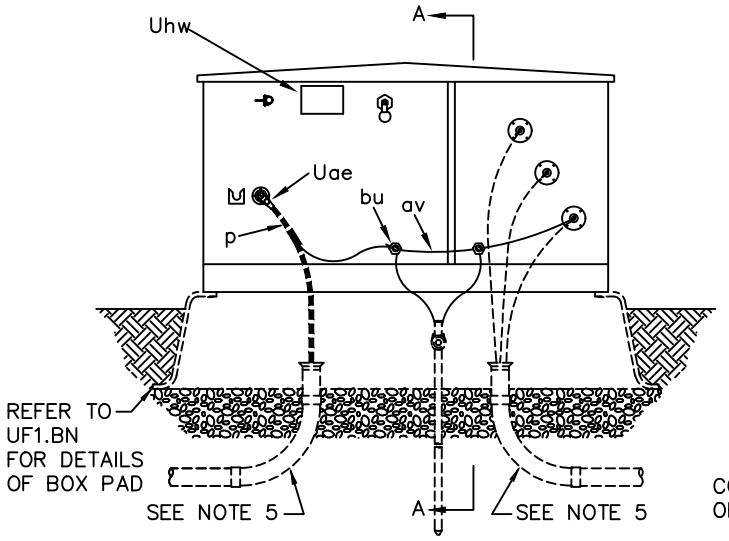

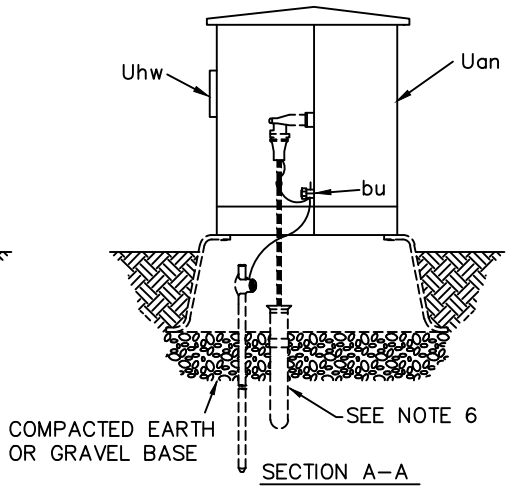

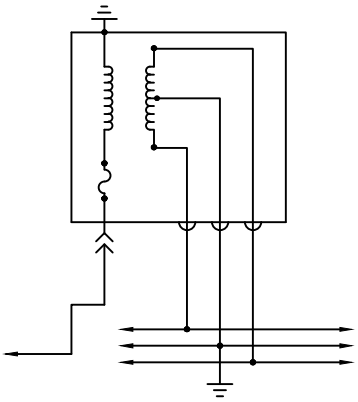

WIRING DIAGRAM

* SPECIFY UG1.01 FOR PADMOUNTED, RADIAL TYPE TRANSFORMER ONLY.

ITEM	QTY.	MATERIAL
p		Connector, as required
av		Jumpers, copper as required
bu	2	Connector, equipment ground
Uae	1	Arrester, bushing
Uan	1	Transformer, padmounted, radial
Ufz	3	Transformer connector block
Uhp	1	Termination, elbow
Uhw	2	Safety signs

NOTES:

1. PROVIDE SUFFICIENT PRIMARY NEUTRAL PIGTAIL AND CABLE SLACK TO PERMIT READY DISCONNECTION OF ELBOW AND MOUNTING ON PARKING STAND. TRAIN CABLES AS SHOWN.
2. INSTALL WITH UNIT UH1.1 OR OTHER GROUNDING UNIT.
3. SPECIFY PAD OR SLEEVE SEPARATELY.
4. INSTALL SAFETY SIGNS ON TRANSFORMER INSIDE AND OUTSIDE ENCLOSURE ACCORDINGLY.
5. NON–METALLIC SWEEPS SHOULD BE STABILIZED WITH CONCRETE ENCASEMENTS IF PULLING TENSIONS DICTATE.
6. LARGER RADIUS SWEEPS, WHICH MAY BE REQUIRED BY PULLING TENSIONS, MAY INCREASE BURIAL DEPTHS.

SINGLE PHASE ONE BUSHING
PADMOUNTED TRANSFORMER
(RADIAL FEED)

AUG 2016	1 – PHASE PRIMARY	UG1.01
RUS		UG1.1

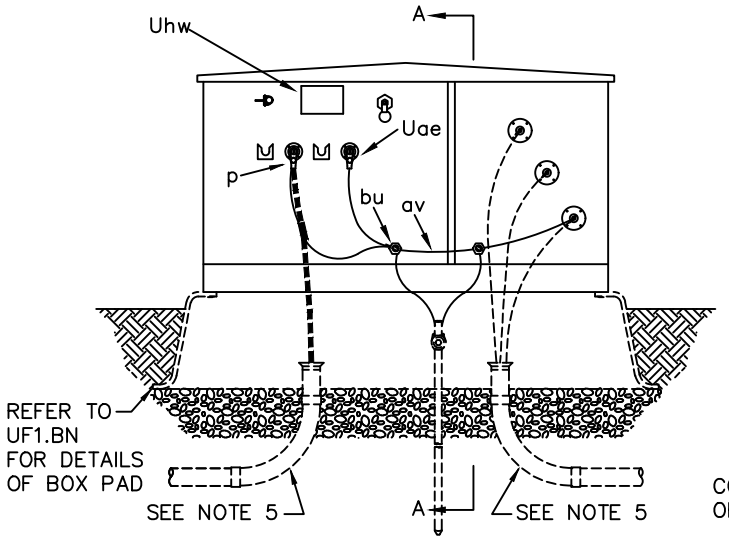

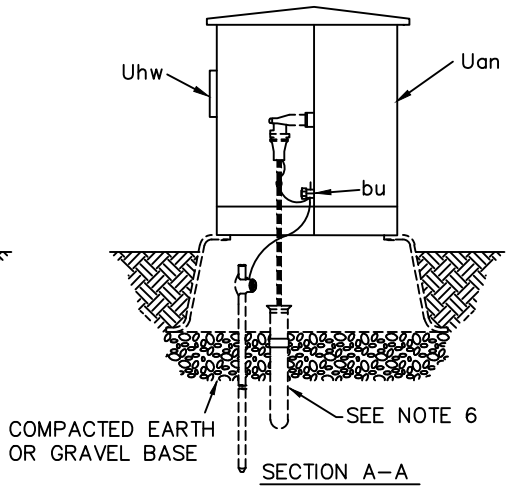

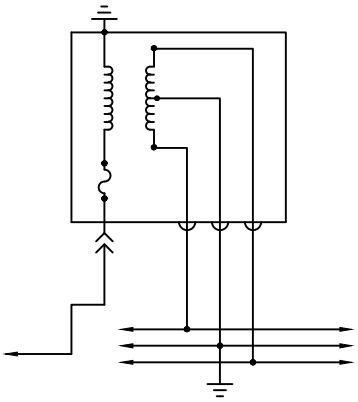

WIRING DIAGRAM

NOTES:

1. PROVIDE SUFFICIENT PRIMARY NEUTRAL PIGTAIL AND CABLE SLACK TO PERMIT READY DISCONNECTION OF ELBOW AND MOUNTING ON PARKING STAND. TRAIN CABLES AS SHOWN.
2. INSTALL WITH UNIT UH1.1 OR OTHER GROUNDING UNIT.
3. SPECIFY PAD OR SLEEVE SEPARATELY.
4. INSTALL SAFETY SIGNS ON TRANSFORMER INSIDE AND OUTSIDE ENCLOSURE ACCORDINGLY.
5. NON–METALLIC SWEEPS SHOULD BE STABILIZED WITH CONCRETE ENCASEMENTS IF PULLING TENSIONS DICTATE.
6. LARGER RADIUS SWEEPS, WHICH MAY BE REQUIRED BY PULLING TENSIONS, MAY INCREASE BURIAL DEPTHS.

ITEM	QTY.	MATERIAL
p		Connector, as required
av		Jumpers, copper as required
bu	2	Connector, equipment ground
Uae	1	Arrester, elbow
Uan	1	Transformer, padmounted, loop
Ufz	3	Transformer connector block
Uhp	1	Termination, elbow
Uhw	2	Safety signs

SINGLE PHASE TWO BUSHING
PADMOUNTED TRANSFORMER
(RADIAL FEED)

AUG 2016	1 – PHASE PRIMARY	
RUS		UG1.2

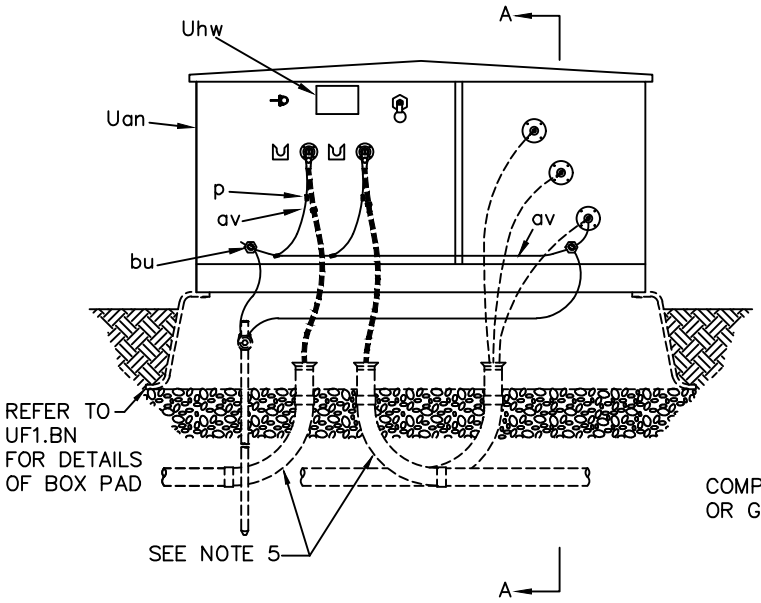

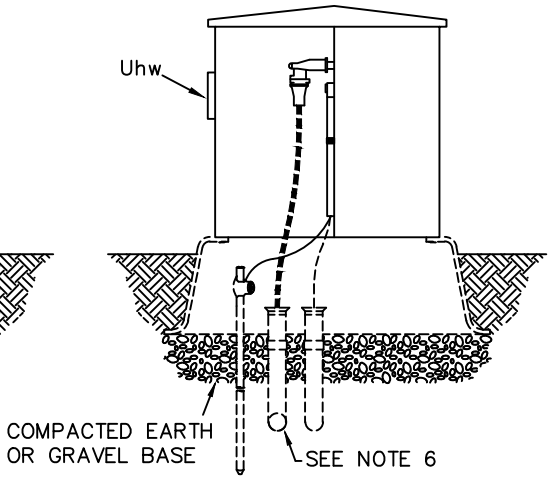

SECTION A–A

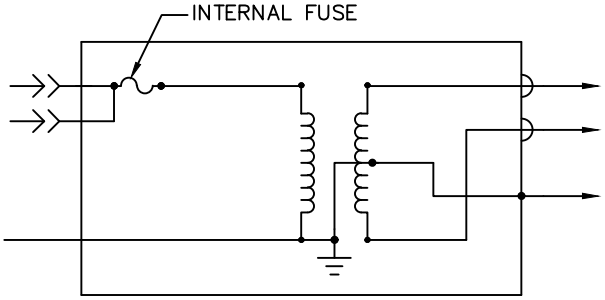

WIRING DIAGRAM

* SPECIFY UG1.02 FOR PADMOUNTED, LOOP TYPE TRANSFORMER ONLY.

ITEM	QTY.	MATERIAL
p		Connector, as required
av		Jumpers, copper, as required
bu	2	Connector, equipment ground
Uae		Arrester, bushing, as required
Uan	1	Transformer, padmounted, loop
Ufz	3	Transformer connector block
Uhp	2	Termination, elbow
Uhw	2	Safety signs

NOTES:

1. PROVIDE SUFFICIENT PRIMARY NEUTRAL PIGTAIL AND CABLE SLACK TO PERMIT READY DISCONNECTION OF ELBOW AND MOUNTING ON PARKING STAND. TRAIN CABLES AS SHOWN.
2. INSTALL WITH UNIT UH1.1 OR OTHER GROUNDING UNIT.
3. SPECIFY PAD OR SLEEVE SEPARATELY.
4. INSTALL SAFETY SIGNS ON TRANSFORMER INSIDE AND OUTSIDE ENCLOSURE ACCORDINGLY.
5. NON–METALLIC SWEEPS SHOULD BE STABILIZED WITH CONCRETE ENCASEMENTS IF PULLING TENSIONS DICTATE.
6. LARGER RADIUS SWEEPS, WHICH MAY BE REQUIRED BY PULLING TENSIONS, MAY INCREASE BURIAL DEPTHS.

SINGLE PHASE TWO BUSHING
PADMOUNTED TRANSFORMER
(LOOP FEED)

AUG 2016	1 – PHASE PRIMARY	UG1.02
RUS		UG1.3

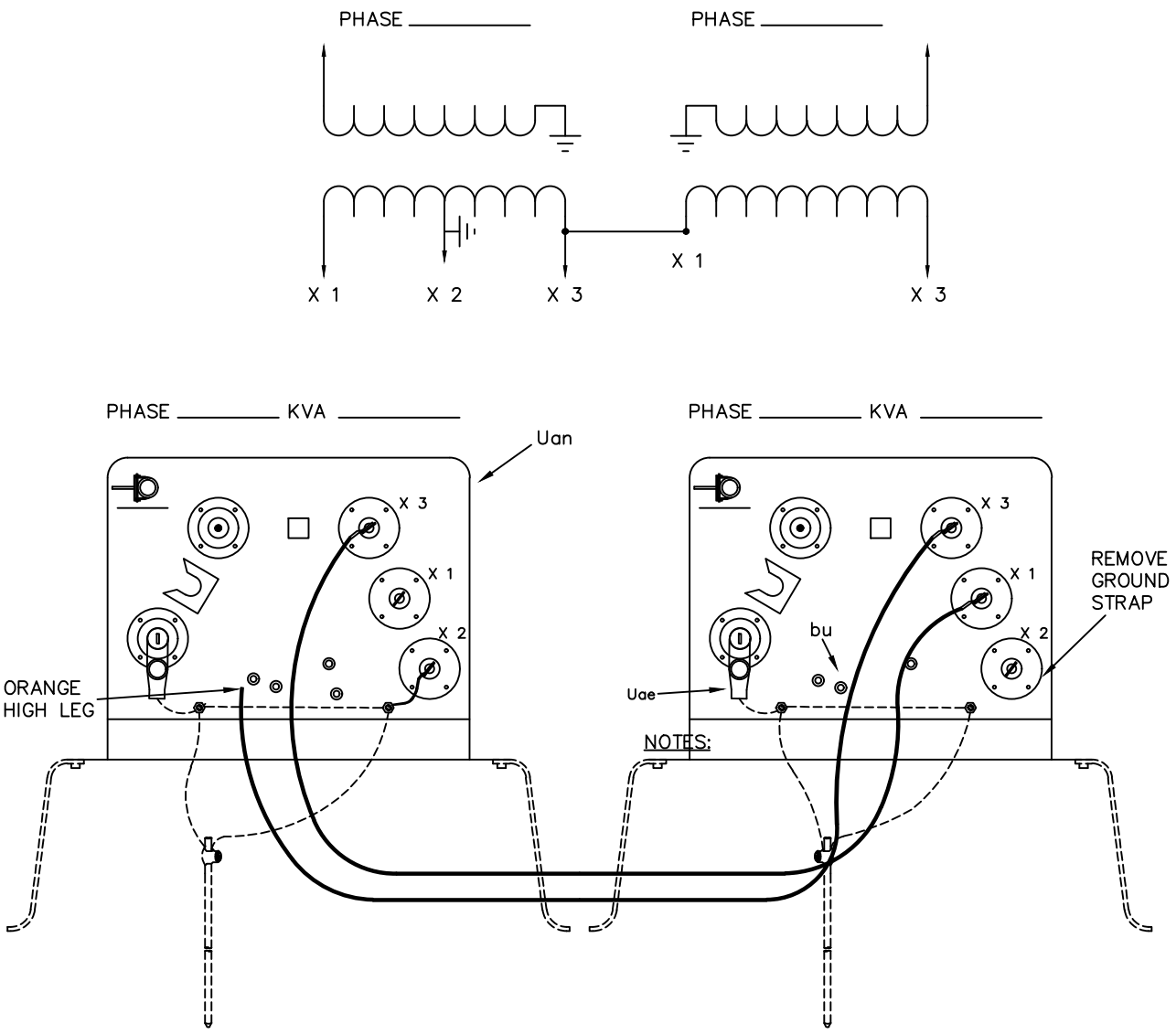

ITEM	QTY.	MATERIAL
p		Connector, as required
av		Jumpers, copper, as required
bu	4	Connector, equipment ground
Uae	2	Arrester, bushing, as required
Uan	2	Transformer, padmounted, loop
Uhp	2	Termination, elbow
Uhw	4	Safety signs

APPLICATION: USED TO SUPPLY LARGE SINGLE PHASE, 120/240 VOLT LOADS WITH SMALL AMOUNT OF THREE PHASE LOADS. ALSO USED WHEN ONLY TWO PHASES OF PRIMARY ARE AVAILABLE.

BANK RATING: THIS BANK HAS ONLY 86.6% OF THE RATING OF THE TWO UNITS MAKING UP THE THREE PHASE SYSTEM AND ONLY 57.7% OF THE THREE PHASE TRANSFORMER RATING. THUS, IT IS RELATIVELY INEFFICIENT WHERE THREE PHASE LOADS PREDOMINATE.

OPEN DELTA CONNECTION
WITH SINGLE PHASE
PADMOUNTED TRANSFORMERS

AUG 2016	1 – PHASE PRIMARY	
RUS		UG2.1

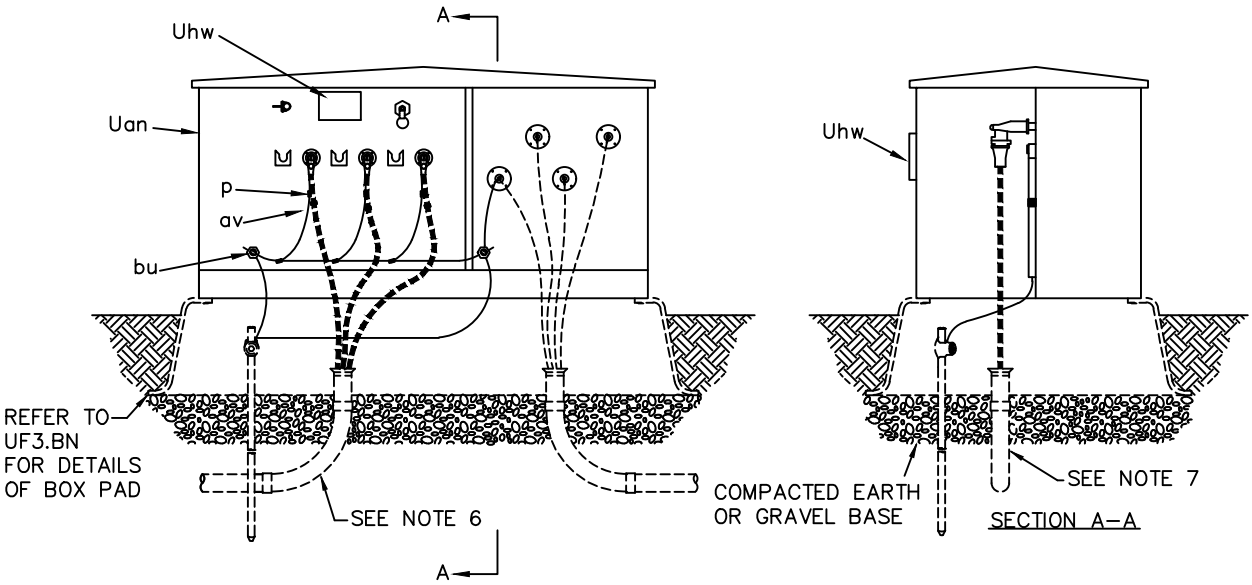

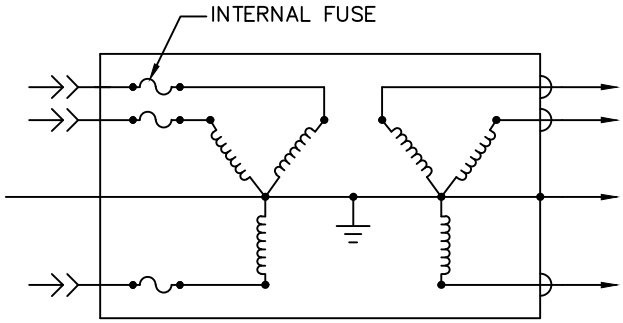

WIRING DIAGRAM

* SPECIFY UG3.01 FOR PADMOUNTED, RADIAL TYPE TRANSFORMER ONLY.

NOTES:

1. ONLY THE WYE–WYE CONNECTION SHOULD BE USED TO MINIMIZE FERRORESONANCE.
2. PROVIDE SUFFICIENT PRIMARY NEUTRAL PIGTAIL AND CABLE SLACK TO PERMIT READY DISCONNECTION OF ELBOW AND MOUNTING ON PARKING STAND. TRAIN CABLES AS SHOWN.
3. INSTALL WITH UNIT UH1.2 OR OTHER GROUNDING UNIT.
4. SPECIFY PAD OR SLEEVE SEPARATELY.
5. INSTALL SAFETY SIGNS ON TRANSFORMER INSIDE AND OUTSIDE ENCLOSURE ACCORDINGLY.
6. NON–METALLIC SWEEPS SHOULD BE STABILIZED WITH CONCRETE ENCASEMENTS IF PULLING TENSIONS DICTATE.
7. LARGER RADIUS SWEEPS, WHICH MAY BE REQUIRED BY PULLING TENSIONS, MAY INCREASE BURIAL DEPTHS.
8. BORROWER SHOULD ADD ARRESTER PROTECTION TO PRIMARY BUSHINGS.

ITEM	QTY.	MATERIAL
p		Connector, as required
av		Jumpers, copper, as required
bu	2	Connector, equipment ground
Uae		Arrester, bushing, as required
Uan	1	Transformer, padmounted, radial
Ufz		Transformer connector block, as required
Uhp	3	Termination, elbow
Uhw	2	Safety signs

THREE PHASE THREE BUSHING
PADMOUNTED TRANSFORMER
(RADIAL FEED)

AUG 2016	3 – PHASE PRIMARY	UG3.01
RUS		UG3.1

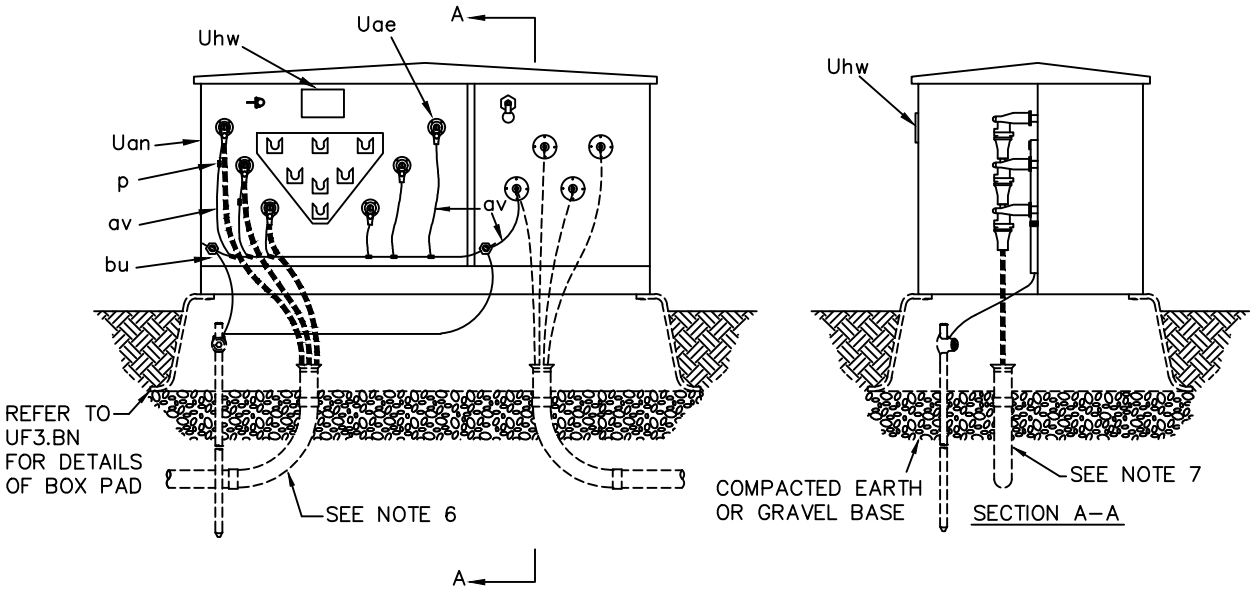

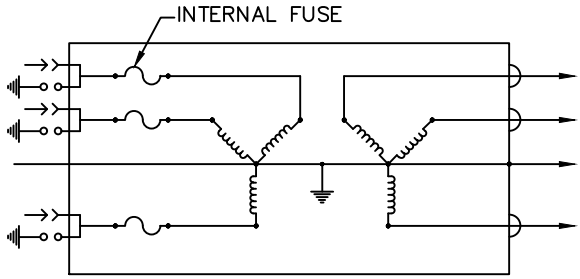

WIRING DIAGRAM

NOTES:

1. ONLY THE WYE–WYE CONNECTION SHOULD BE USED TO MINIMIZE FERRORESONANCE.
2. PROVIDE SUFFICIENT PRIMARY NEUTRAL PIGTAIL AND CABLE SLACK TO PERMIT READY DISCONNECTION OF ELBOW AND MOUNTING ON PARKING STAND. TRAIN CABLES AS SHOWN.
3. INSTALL WITH UNIT UH1.2 OR OTHER GROUNDING UNIT.
4. SPECIFY PAD OR SLEEVE SEPARATELY.
5. INSTALL SAFETY SIGNS ON TRANSFORMER INSIDE AND OUTSIDE ENCLOSURE ACCORDINGLY.
6. NON–METALLIC SWEEPS SHOULD BE STABILIZED WITH CONCRETE ENCASEMENTS IF PULLING TENSIONS DICTATE.
7. LARGER RADIUS SWEEPS, WHICH MAY BE REQUIRED BY PULLING TENSIONS, MAY INCREASE BURIAL DEPTHS.

ITEM	QTY.	MATERIAL
p		Connector, as required
av		Jumpers, copper, as required
bu	2	Connector, equipment ground
Uae	3	Arrester, elbow type
Uan	1	Transformer, padmounted, loop
Ufz		Transformer connector block, as required
Uhp	3	Termination, elbow
Uhw	2	Safety signs

THREE PHASE SIX BUSHING
PADMOUNTED TRANSFORMER
(RADIAL FEED)

AUG 2016	3 – PHASE PRIMARY	
RUS		UG3.2

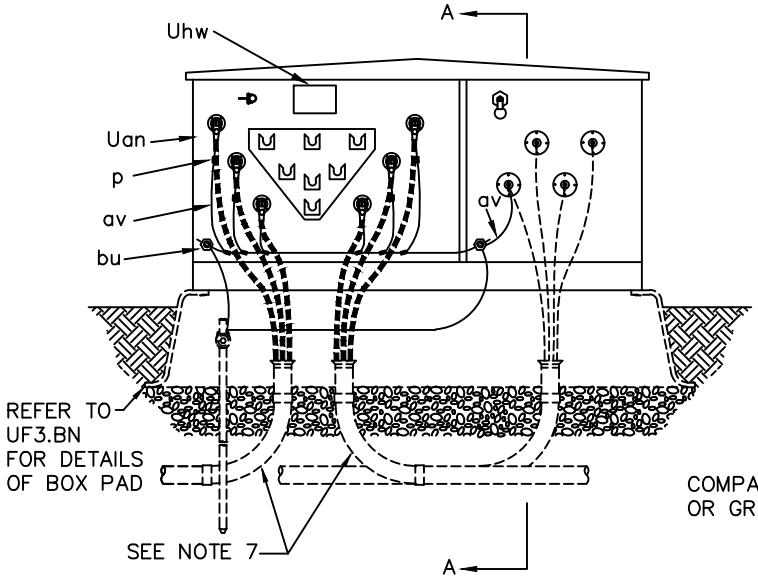

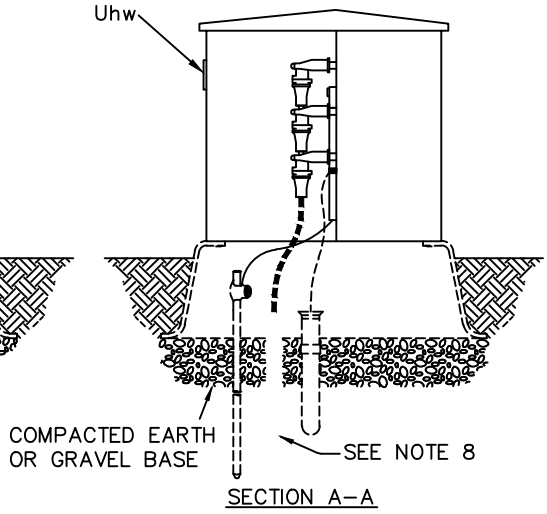

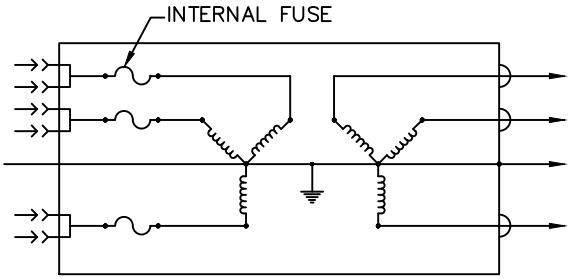

WIRING DIAGRAM

* SPECIFY UG3.02 FOR PADMOUNTED, LOOP TYPE TRANSFORMER ONLY.

NOTES:

1. ONLY THE WYE–WYE CONNECTION SHOULD BE USED TO MINIMIZE FERRORESONANCE.
2. PROVIDE SUFFICIENT PRIMARY NEUTRAL PIGTAIL AND CABLE SLACK TO PERMIT READY DISCONNECTION OF ELBOW AND MOUNTING ON PARKING STAND. TRAIN CABLES AS SHOWN.
3. INSTALL WITH UNIT UH1.2 OR OTHER GROUNDING UNIT.
4. SPECIFY KVA SIZE OF TRANSFORMER.
5. SPECIFY PAD OR SLEEVE SEPARATELY.
6. INSTALL SAFETY SIGNS ON TRANSFORMER INSIDE AND OUTSIDE ENCLOSURE ACCORDINGLY.
7. NON–METALLIC SWEEPS SHOULD BE STABILIZED WITH CONCRETE ENCASEMENTS IF PULLING TENSIONS DICTATE.
8. LARGER RADIUS SWEEPS, WHICH MAY BE REQUIRED BY PULLING TENSIONS, MAY INCREASE BURIAL DEPTHS.

ITEM	QTY.	MATERIAL
p		Connector, as required
av		Jumpers, copper, as required
bu	2	Connector, equipment ground
Uae		Arrester, bushing, as required
Uan	1	Transformer, padmounted, loop
Ufz		Transformer connector block, as required
Uhp	6	Termination, elbow
Uhw	2	Safety signs

THREE PHASE SIX BUSHING
PADMOUNTED TRANSFORMER
(LOOP FEED)

AUG 2016	3 – PHASE PRIMARY	UG3.02
RUS		UG3.3

GROUNDING ASSEMBLY UNITS

DRAWING NUMBERS		**DRAWING TITLE (DESCRIPTION)**
1728F-806 (New)	**1728F-806** (Old)	
UH.01	(UM6-6)	GROUND ROD ASSEMBLY
UH1.1	(UM48-1)	GROUNDING ASSEMBLY FOR PADMOUNTED TRANSFORMERS AND ENCLOSURES (1 ROD)
UH1.2	(UM48-2)	GROUNDING ASSEMBLY FOR PADMOUNTED TRANSFORMERS AND ENCLOSURES (2 RODS)
UH1.4	(UM48-5)	GROUNDING ASSEMBLY FOR PADMOUNTED TRANSFORMERS AND ENCLOSURES (4 RODS)
UH1.7	(UM48-6)	GROUND ARRAY FOR PADMOUNTED TRANSFORMERS AND ENCLOSURES
UH2.0 UH2.2		COUNTERPOISE GROUNDING
UH2.7		TRENCH TYPE GROUNDING ASSEMBLY - RISER TO TRANSFORMER OUTSIDE OF CONDUIT
UH3.1	(UX5)	GROUNDING ASSEMBLY FOR SECTIONALIZING ENCLOSURES (1 ROD)
UH4.1	(UX4)	GROUNDING ASSEMBLY FOR CABLE ABOVE GRADE ENCLOSURES (1 ROD)
UH4.1G	(UM6-39)	JACKETED CABLE GROUNDING INSTALLATION (HEAT SHRINK OR COLD SHRINK)

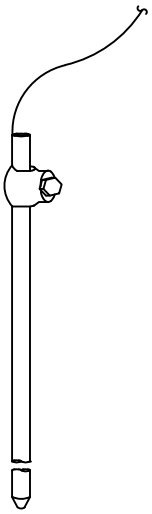

ai, aj, cj
GROUND ROD ASSEMBLY

ITEM	QTY.	MATERIAL
ai	1	Rod, ground
aj	1	Clamp, ground rod
cj		Wire, ground, as required

GROUND ROD ASSEMBLY

AUG 2016		
RUS		UH.01

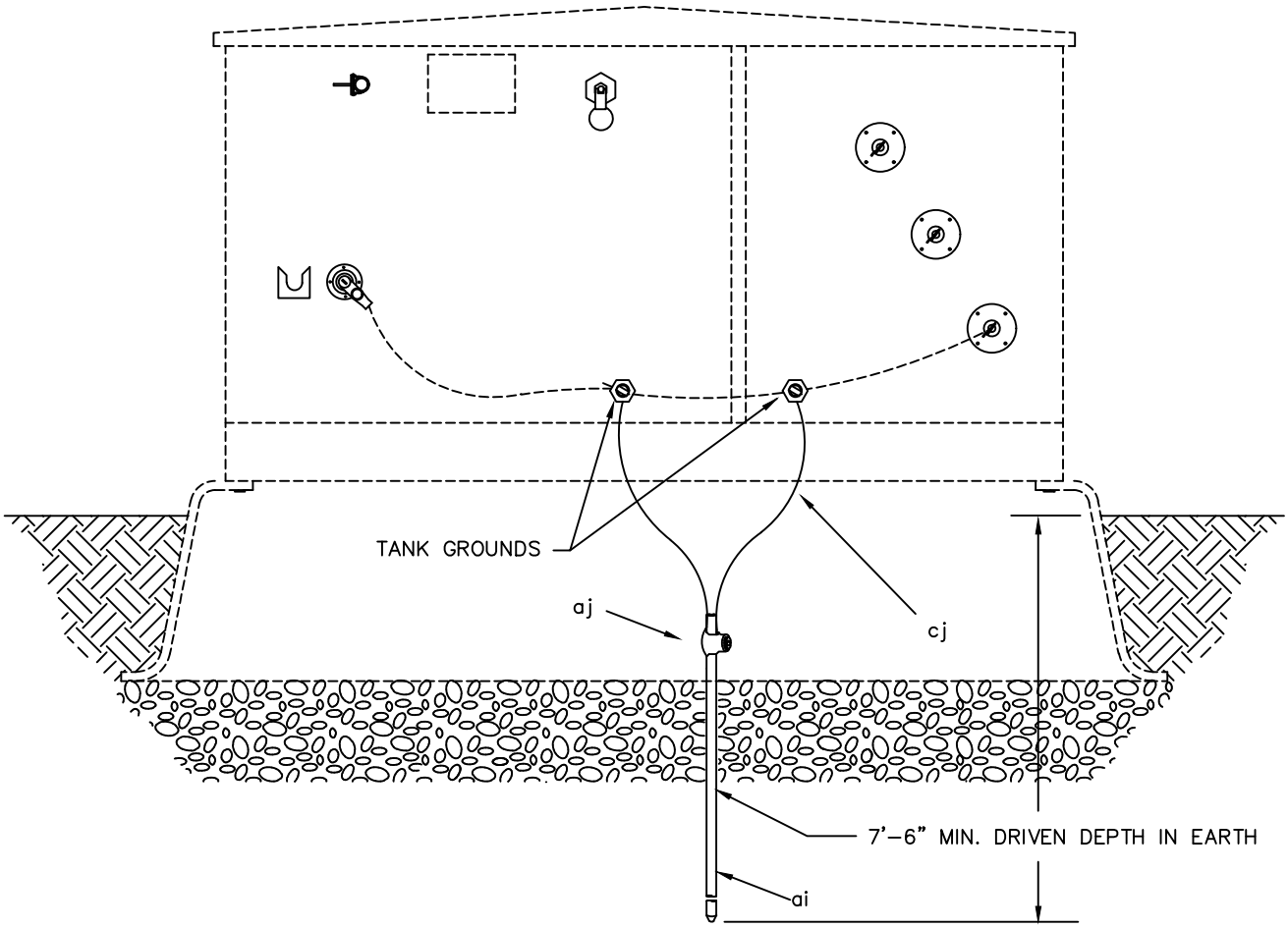

ITEM	QTY.	MATERIAL
p		Connector, as required
ai	1	Rod, ground
aj	1	Clamp, ground rod
cj		Wire, ground, as required

NOTES:

1. TIE CONCENTRIC NEUTRALS TOGETHER BEFORE TAP TO GROUND LOOP OR SIZE GROUND LOOP LARGE ENOUGH TO ASSURE SAME CONDUCTIVITY AS CABLE NEUTRAL.

GROUNDING ASSEMBLY FOR
PADMOUNTED TRANSFORMERS AND ENCLOSURES
(1 ROD)

AUG 2016		
RUS		UH1.1

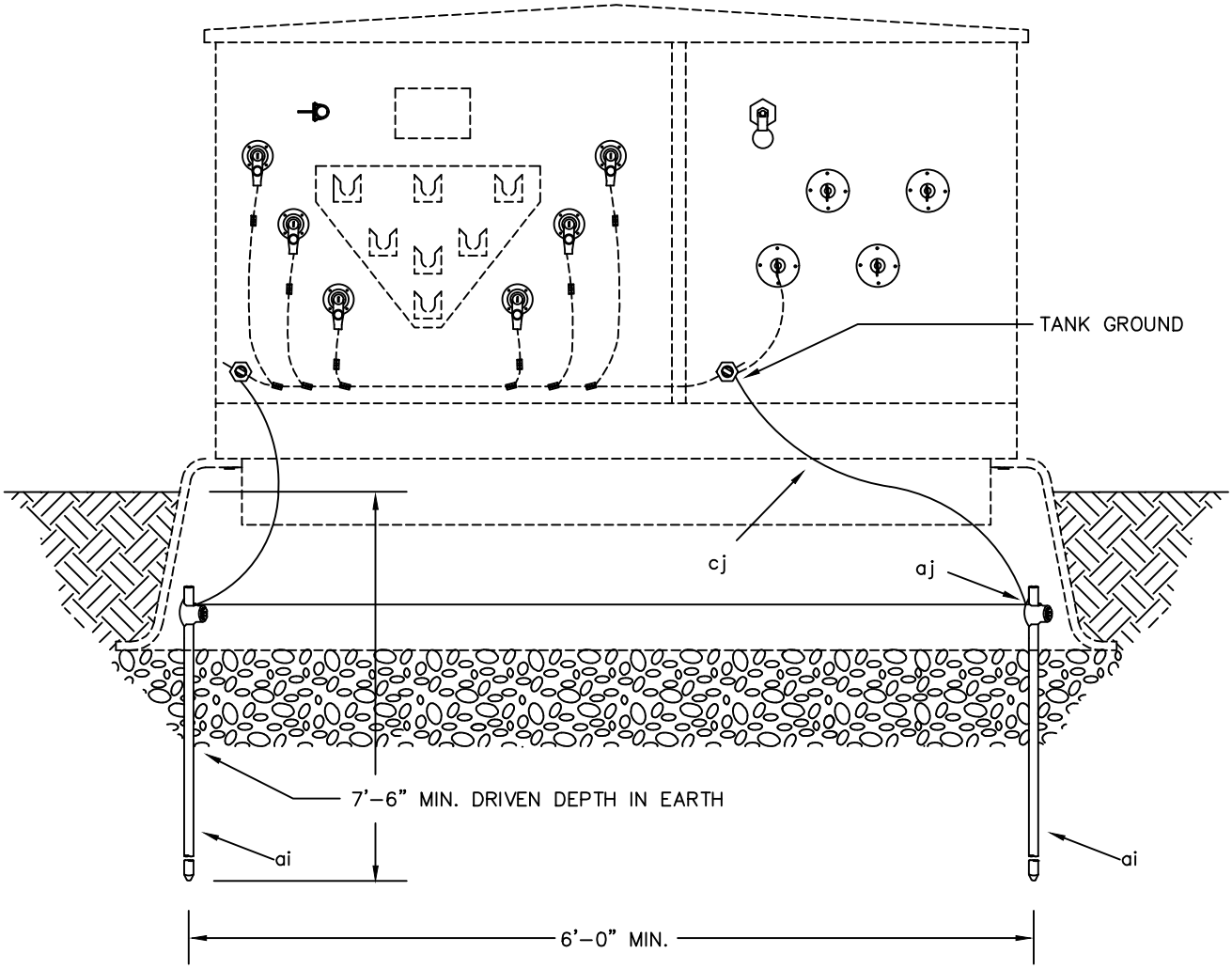

ITEM	QTY.	MATERIAL
p		Connector, as required
ai	2	Rod, ground
aj	2	Clamp, ground rod
cj		Wire, ground, as required

NOTES:

1. TIE CONCENTRIC NEUTRALS TOGETHER BEFORE TAP TO GROUND LOOP OR SIZE GROUND LOOP LARGE ENOUGH TO ASSURE SAME CONDUCTIVITY AS CABLE NEUTRAL.
2. MULTIPLE RODS MAY NOT FIT INSIDE ENCLOSURE. ONLY ONE ROD MUST BE INSTALLED INSIDE ENCLOSURE.

GROUNDING ASSEMBLY FOR
PADMOUNTED TRANSFORMERS AND ENCLOSURES
(2 RODS)

AUG 2016		
RUS		UH1.2

TOP VIEW

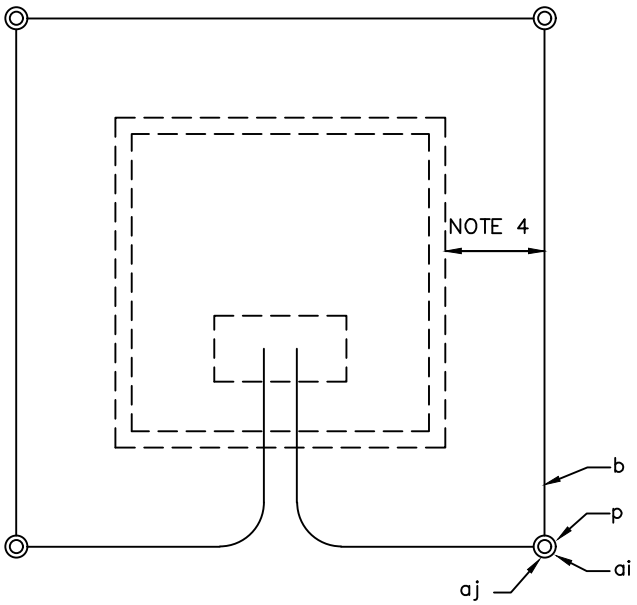

NOTE:

IF USED, CONNECT ANODE LEAD INSIDE PAD MOUNTED ENCLOSURES FOR TESTING PURPOSES.

FRONT VIEW

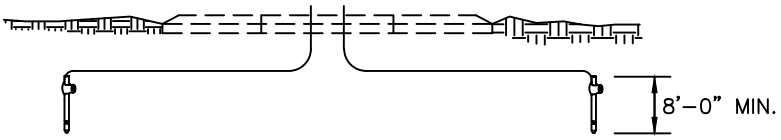

NOTES:

1. PLACE ONE GROUND ROD AT EACH CORNER.
2. GROUNDING GRID BARE COPPER BURIED 6" BELOW GROUND, RUN WIRE INTO BASEMENT AND ALLOW 5'–0" FOR GROUNDING LIVE FRONT SWITCH / FUSE ENCLOSURES.
3. PAD OR BOX PAD IS NOT PART OF THIS UNIT.
4. PLACE GROUND WIRE A MINIMUM OF 24" AWAY FROM THE SIDE OR SIDES OF PAD THAT A PERSON WOULD STAND TO OPERATE THE EQUIPMENT. THE GROUND WIRE MAY BE PLACED WITHIN 12" OF THE OTHER SIDES.
5. SPECIFY LENGTH OF GROUND RODS AT EACH CORNER.

ITEM	QTY.	MATERIAL
p		Connector, as required
ai	4	Rod, ground
aj	4	Clamp, ground rod
cj		Wire, ground, bare copper, as required

GROUNDING ASSEMBLY FOR
PADMOUNTED TRANSFORMERS AND ENCLOSURES
(4 RODS)

AUG 2016		
RUS		UH1.4

FRONT VIEW

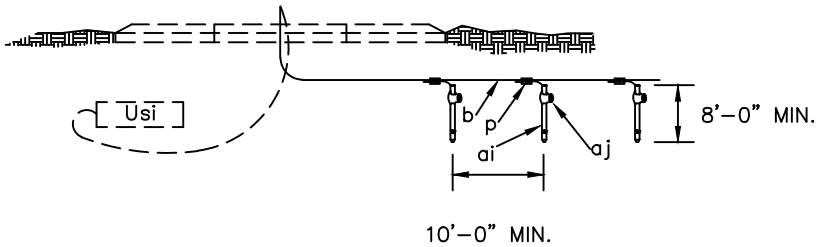

NOTE:
IF USED, CONNECT ANODE LEAD INSIDE PAD MOUNTED ENCLOSURES FOR TESTING PURPOSES

TOP VIEW

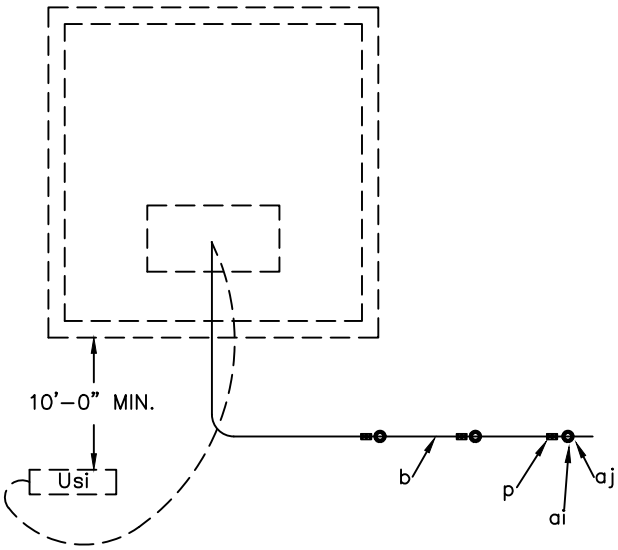

NOTES:

1. PLACE A MINIMUM OF TWO GROUND RODS IN SERIES. MINIMUM DISTANCE BETWEEN GROUND UNIT ASSEMBLIES – 10'–0".
2. GROUNDING GRID BARE COPPER BURIED 6" BELOW GROUND, RUN WIRE INTO BASEMENT AND ALLOW 5'–0" FOR GROUNDING LIVE FRONT SWITCH / FUSE ENCLOSURES.
3. PAD OR BOX PAD IS NOT PART OF THIS UNIT.
4. SPECIFY NUMBER AND LENGTH OF GROUND RODS.

ITEM	QTY.	MATERIAL
p		Connector, as required
ai		Rod, ground, as required
aj		Clamp, ground rod, as required
cj		Wire, ground, bare copper, as required

GROUNDING ARRAY
FOR PADMOUNTED
TRANSFORMERS AND ENCLOSURES

AUG 2016		
RUS		UH1.7

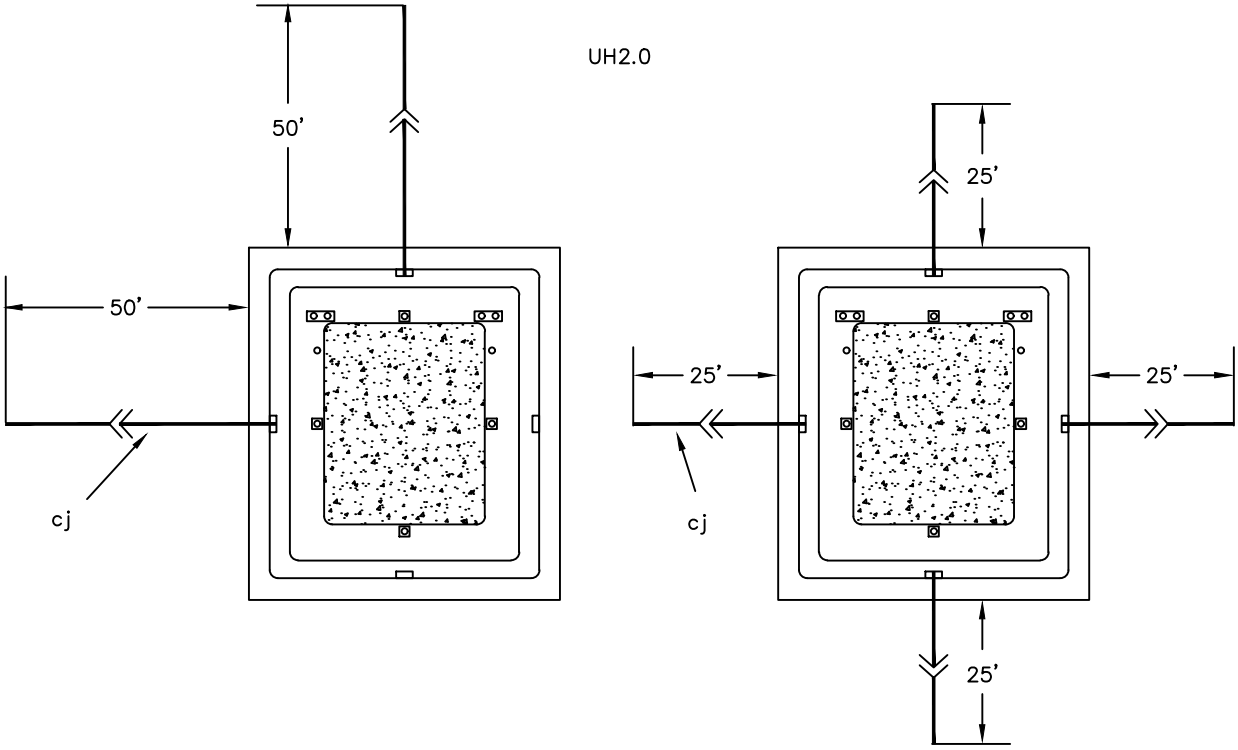

UH2.2

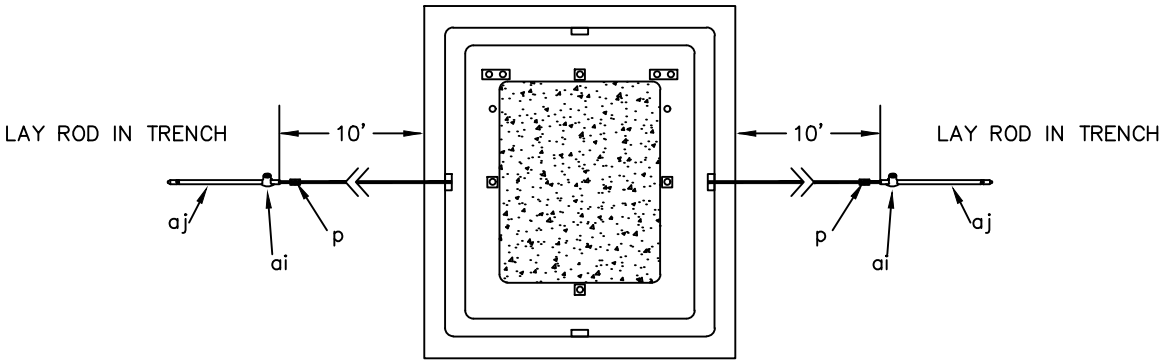

ITEM	MATERIAL	UH2.0	UH2.2
p	Connector, as required		
ai	Rod, ground		2
aj	Clamp, ground rod		2
cj	Wire, ground, bare copper	100	20

COUNTERPOISE GROUNDING

AUG 2016		UH2.0
RUS		UH2.2

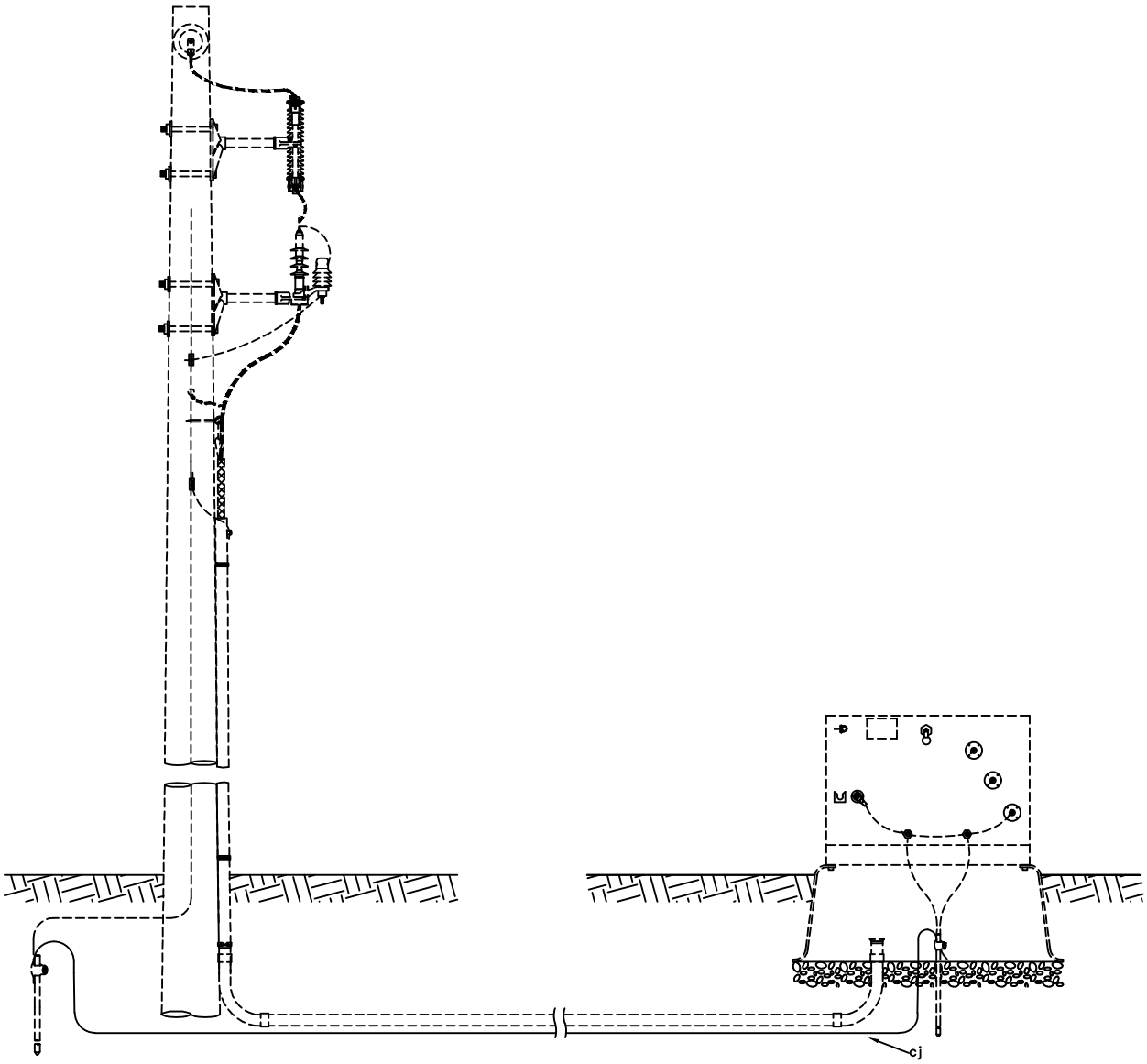

ITEM	QTY.	MATERIAL
p		Connector, as required
cj		Wire, ground, bare copper, as required

TRENCH TYPE GROUNDING
ASSEMBLY – RISER TO TRANSFORMER
OUTSIDE OF CONDUIT

AUG 2016		
RUS		UH2.7

SINGLE PHASE APPLICATION

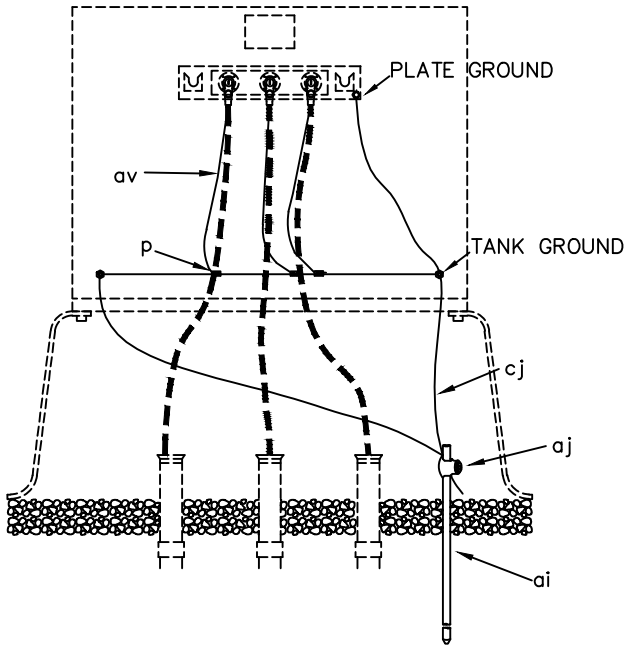

THREE PHASE APPLICATION

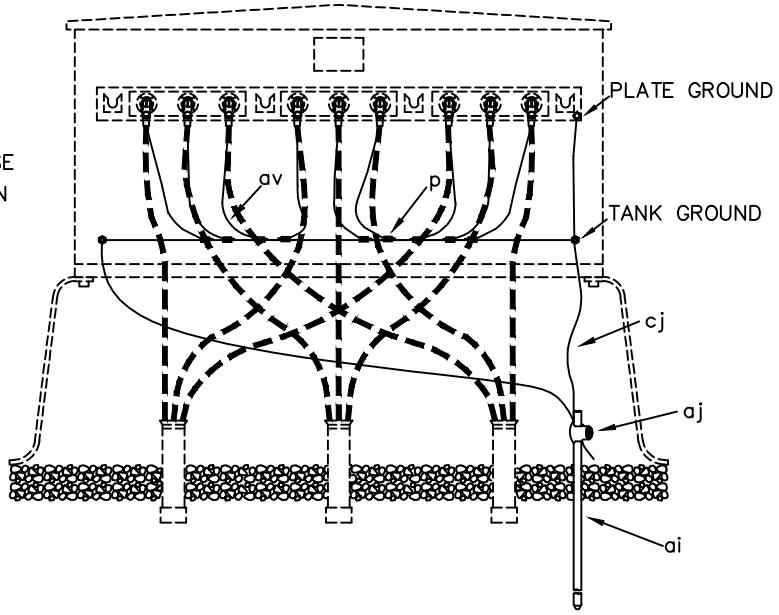

ITEM	MATERIAL	UH3.1	UH3.2
p	Connector, as required		
ai	Rod, ground	1	1
aj	Clamp, ground rod	1	1
av	Jumper, copper, as required		
cj	Wire, ground, as required		

NOTES:

1. TIE CONCENTRIC NEUTRALS TOGETHER BEFORE TAP TO GROUND LOOP OR SIZE GROUND LOOP LARGE ENOUGH TO ASSURE SAME CONDUCTIVITY AS CABLE NEUTRAL.

GROUNDING ASSEMBLY FOR SECTIONALIZING ENCLOSURES (1 ROD)

AUG 2016		
RUS		UH3.1

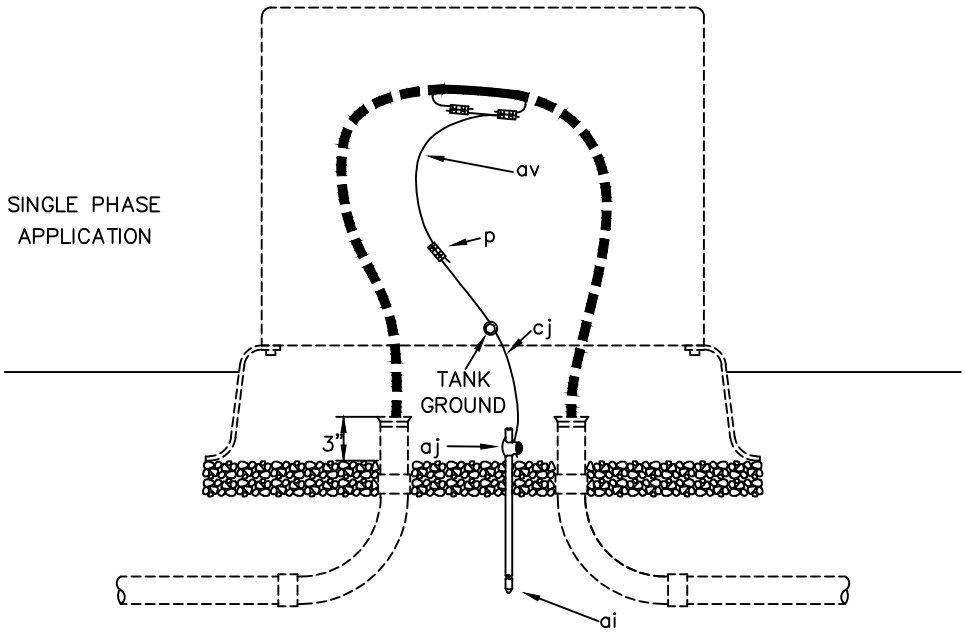

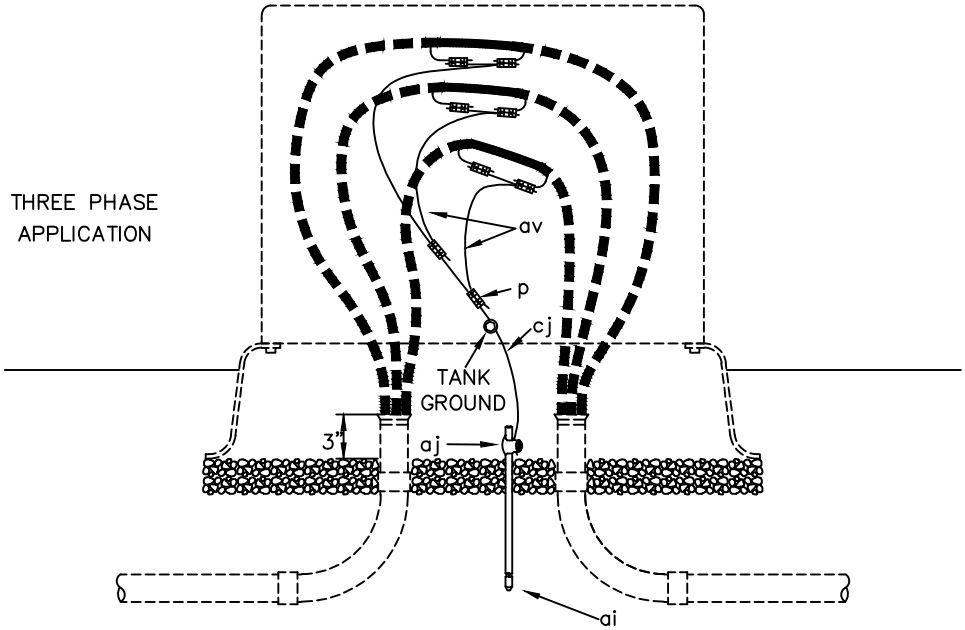

ITEM	MATERIAL	UH4.1	UH4.2
p	Connector, as required		
ai	Rod, ground	1	1
aj	Clamp, ground rod	1	1
av	Jumper, copper, as required		
cj	Wire, ground, as required		

GROUNDING ASSEMBLY FOR
CABLE ABOVE GRADE ENCLOSURES
(1 ROD)

AUG 2016		
RUS		UH4.1

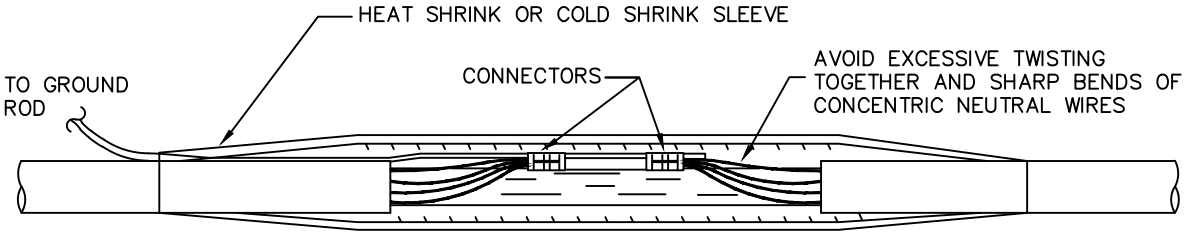

JACKETED CABLE GROUNDING INSTALLATION (HEAT SHRINK OR COLD SHRINK)		
AUG 2016		
RUS		UH4.1G

SECONDARY ASSEMBLY UNITS

DRAWING NUMBERS		**DRAWING TITLE (DESCRIPTION)**
1728F-806 (New)	**1728F-806** (Old)	
UJ1.01	(UM6-32)	SECONDARY SPLICE
UJ1	(UJ1)	SECONDARY INSULATED CONNECTOR BLOCKS
UJ2	(UJ2)	TRANSFORMER CONNECTOR BLOCKS
UJ3.1	(UK5)	SECONDARY PEDESTAL SINGLE PHASE UNDERGROUND CABLE
UJ3.3		SECONDARY PEDESTAL THREE PHASE UNDERGROUND CABLE
UJ4.1	(UK6)	SECONDARY HANDHOLE SINGLE PHASE UNDERGROUND CABLE
UJ4.3		SECONDARY HANDHOLE THREE PHASE UNDERGROUND CABLE

BOOT OR SLEEVE – INSULATED

(600 VOLT)

ITEM	QTY.	MATERIAL
Ugq	1	Boot or sleeve, insulated
	1	Secondary connector, as required

SECONDARY SPLICE

AUG 2016		
RUS		UJ1.01

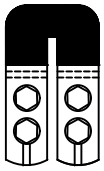

UJ2.1

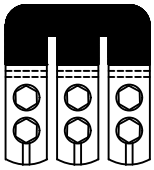

UJ3.1

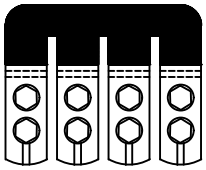

UJ4.1

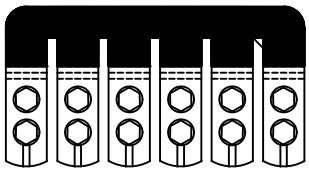

UJ6.1

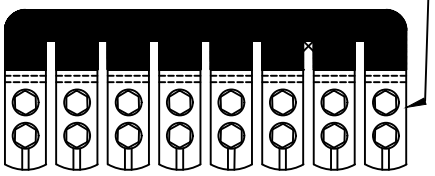

UJ8.1

CONNECTOR BLOCKS USED IN SECONDARY PEDESTALS

NOTES:

1. INSULATED COVERS ARE NOT SHOWN.
2. ADD SUFFIX ".1" FOR SET OF 2 INSULATED AND ONE BARE FOR NEUTRAL

ITEM	QTY.	MATERIAL
Ugp		Connector Blocks, as required

SECONDARY INSULATED CONNECTOR BLOCKS

AUG 2016		
RUS		UJ1

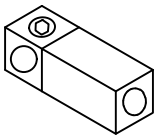

UJ2.1

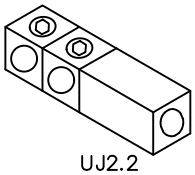

UJ2.2

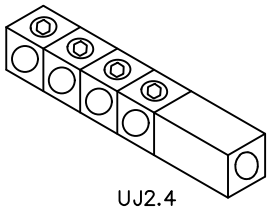

UJ2.4

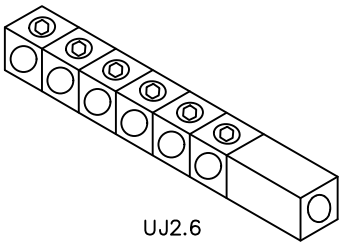

UJ2.6

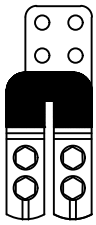

UJ2.2SPD

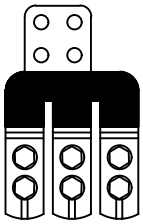

UJ2.3SPD

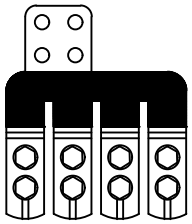

UJ2.4SPD

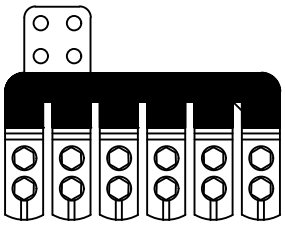

UJ2.6SPD

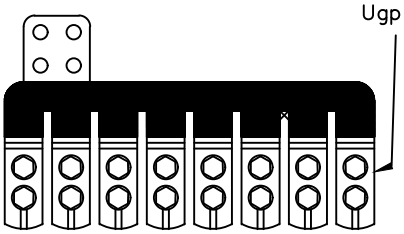

UJ2.8SPD

TRANSFORMER CONNECTOR BLOCKS

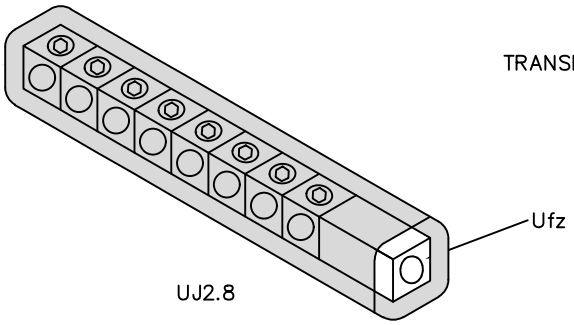

UJ2.8

NOTES:

1. INSULATED COVERS ARE NOT SHOWN.
2. SUFFIX "SPD" FOR SPADE APPLICATION.
3. ADD SUFFIX ".1" FOR SET OF 2 INSULATED AND ONE BARE FOR NEUTRAL.

ITEM	QTY.	MATERIAL
Ufz		Transformer Connector Block, as required
Ugp		Connector Blocks, as required

TRANSFORMER CONNECTOR BLOCKS

AUG 2016

RUS

UJ2

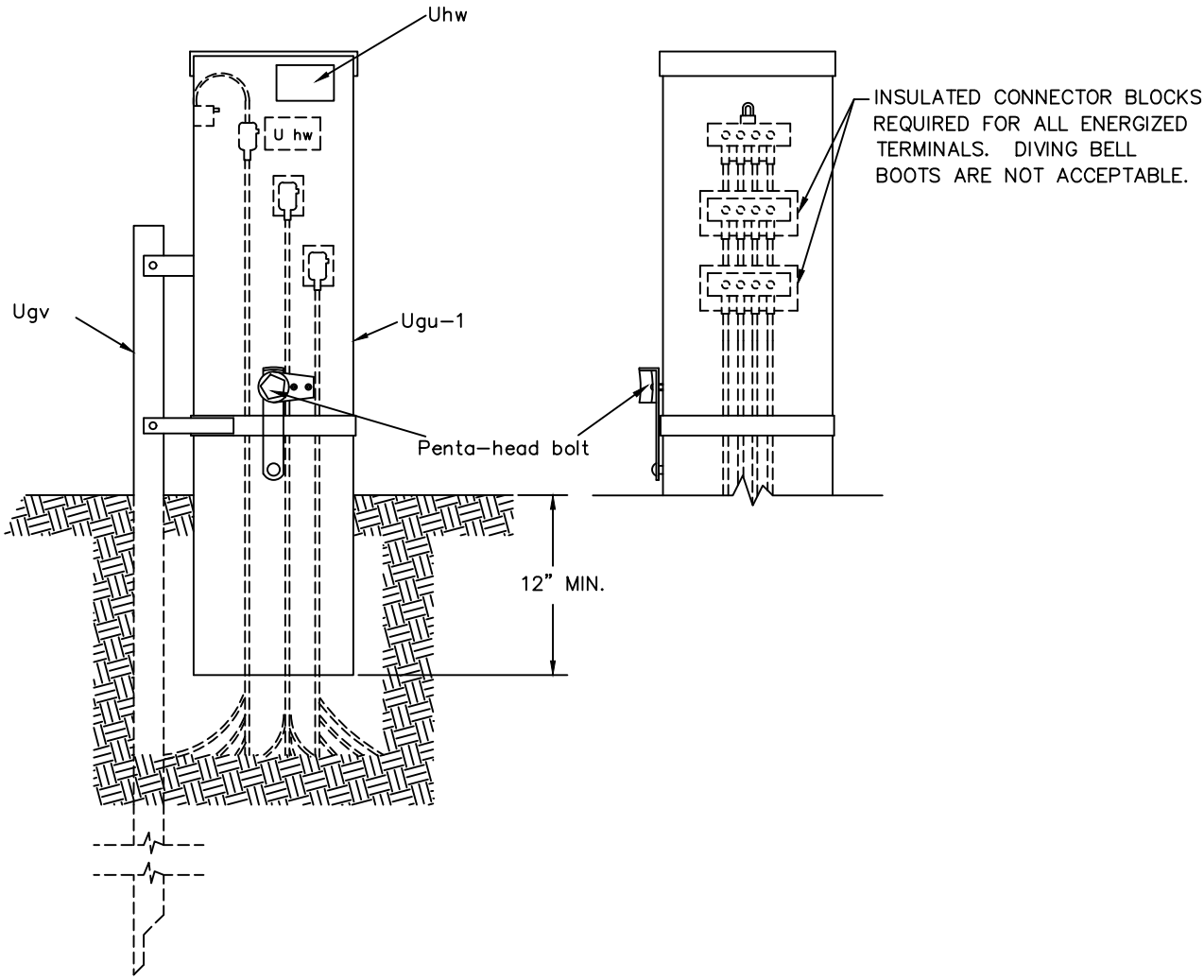

ITEM	QTY.	MATERIAL
Ugu–1	1	Pedestal, Power
Ugv	1	Stake, Power Pedestal (if necessary)
Uhw	2	Safety signs

NOTES:

1. ITEM Ugv OPTIONAL – SEE PEDESTAL MANUFACTURER'S SPECIFICATIONS AND RECOMMENDATIONS.
2. ALL PEDESTALS SHALL BE GROUNDED IN ACCORANCE WITH THE NATIONAL ELECTRICAL SAFETY CODE (NESC).

SECONDARY PEDESTAL SINGLE PHASE
ABOVE GRADE ENCLOSURE

AUG 2016		
RUS		UJ3.1

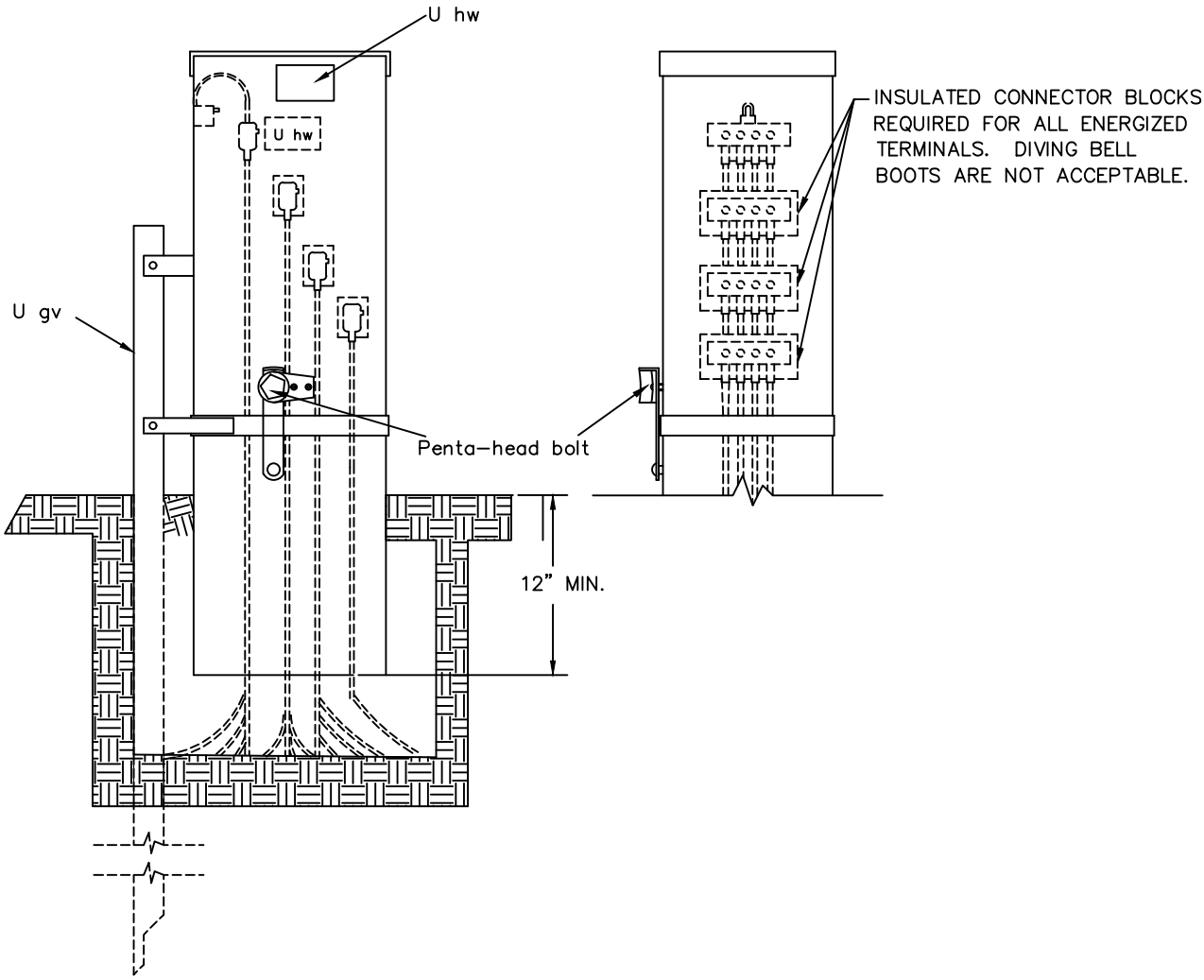

ITEM	QTY.	MATERIAL
Ugu-1	1	Pedestal, Power
Ugv	1	Stake, Power Pedestal (if necessary)
Uhw	2	Safety signs

NOTES:

1. INSTALL "WARNING" SIGN ON OUTSIDE OF PEDESTAL.
2. ITEM Ugv OPTIONAL – SEE PEDESTAL MANUFACTURER'S SPECIFICATIONS AND RECOMMENDATIONS.
3. ALL PEDESTALS SHALL BE GROUNDED IN ACCORANCE WITH THE NATIONAL ELECTRICAL SAFETY CODE (NESC).

SECONDARY PEDESTAL THREE PHASE
ABOVE GRADE ENCLOSURE

AUG 2016		
RUS		UJ3.3

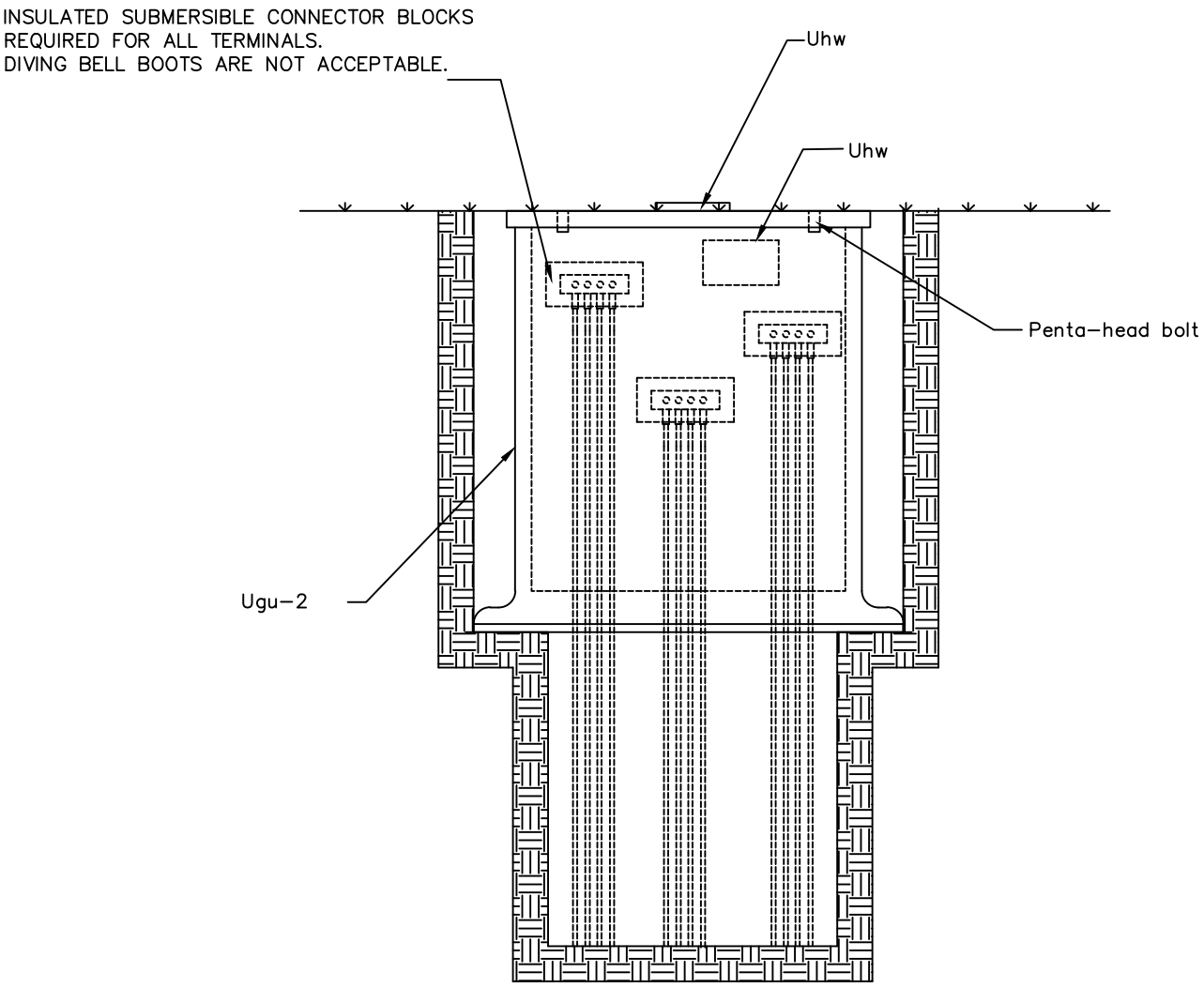

ITEM	QTY.	MATERIAL
Ugu-2	1	Pedestal, Power, below grade
Uhw	2	Safety signs

NOTES:

1. ALL PEDESTALS SHALL BE GROUNDED IN ACCORDANCE WITH THE NATIONAL ELECTRICAL SAFETY CODE (NESC).

SECONDARY HANDHOLE SINGLE PHASE
BELOW GRADE ENCLOSURE

AUG 2016		
RUS		UJ4.1

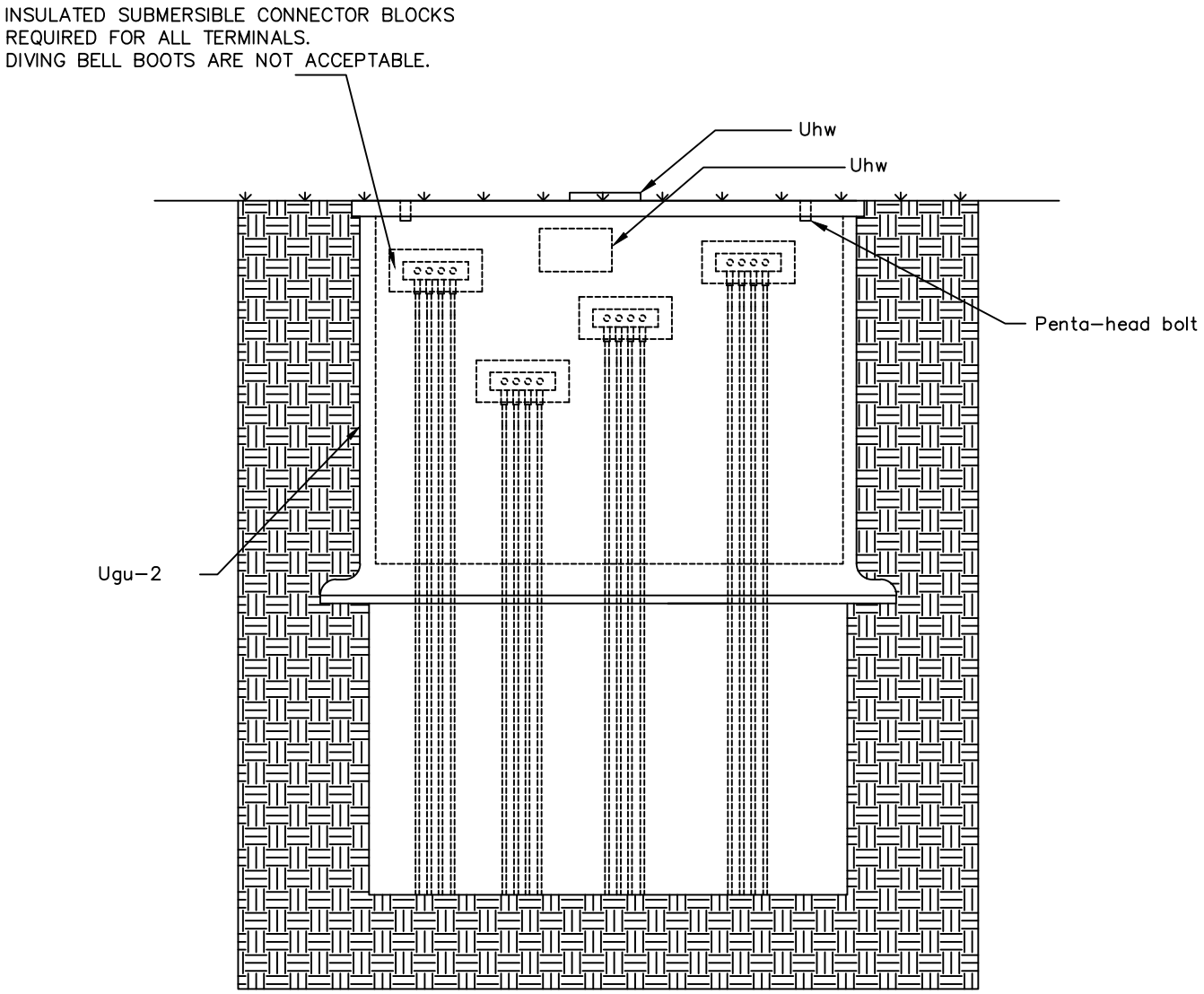

ITEM	QTY.	MATERIAL
Ugu-2	1	Pedestal, Power, below grade
Uhw	2	Safety signs

NOTES:

1. ALL PEDESTALS SHALL BE GROUNDED IN ACCORDANCE WITH THE NATIONAL ELECTRICAL SAFETY CODE (NESC).

SECONDARY HANDHOLE THREE PHASE
BELOW GRADE ENCLOSURE

AUG 2016		
RUS		UJ4.3

SECONDARY SERVICE ASSEMBLY UNITS

DRAWING NUMBERS		**DRAWING TITLE (DESCRIPTION)**
1728F-806 (New)	**1728F-806** (Old)	
UK1.1	(UM5)	SECONDARY CABLE RISER POLE WITHOUT METER BASE
UK2.1		SECONDARY RISER BOTTOM CONNECTION
UK2.2		SECONDARY RISER BOTTOM SIDE CONNECTION
UK3.1	(UX8)	TEMPORARY CONDUIT TERMINATION WITHOUT METER BASE
UK4		SECONDARY BREAKER

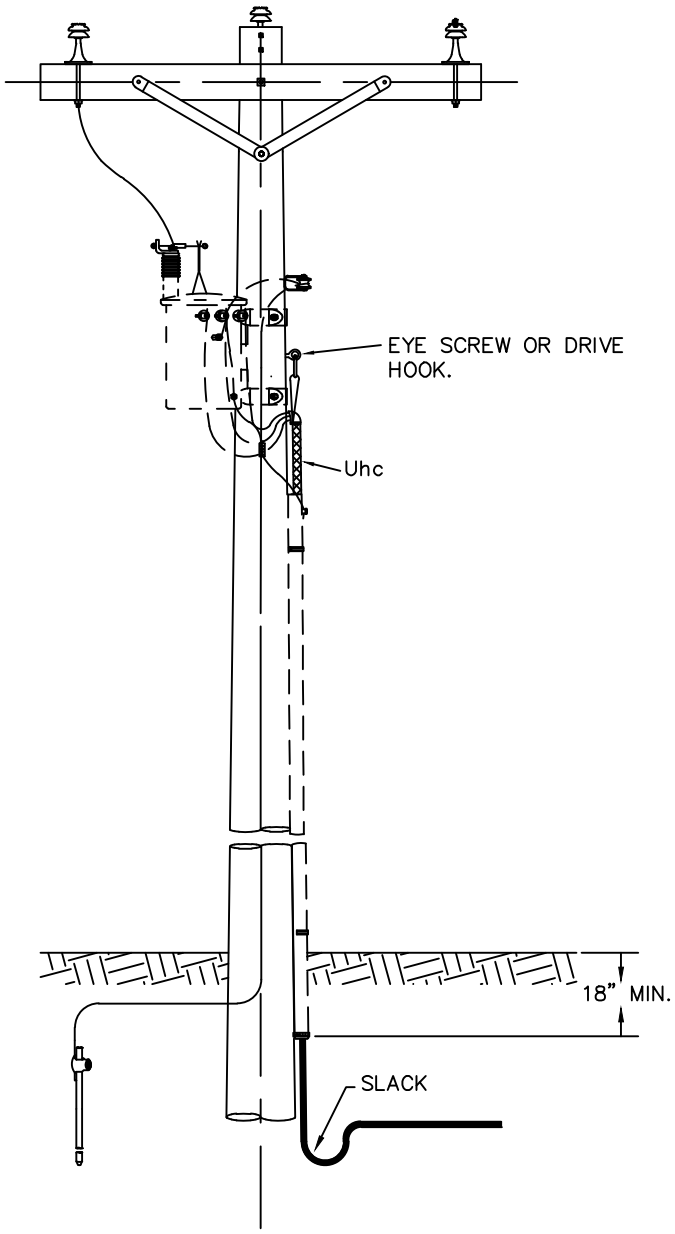

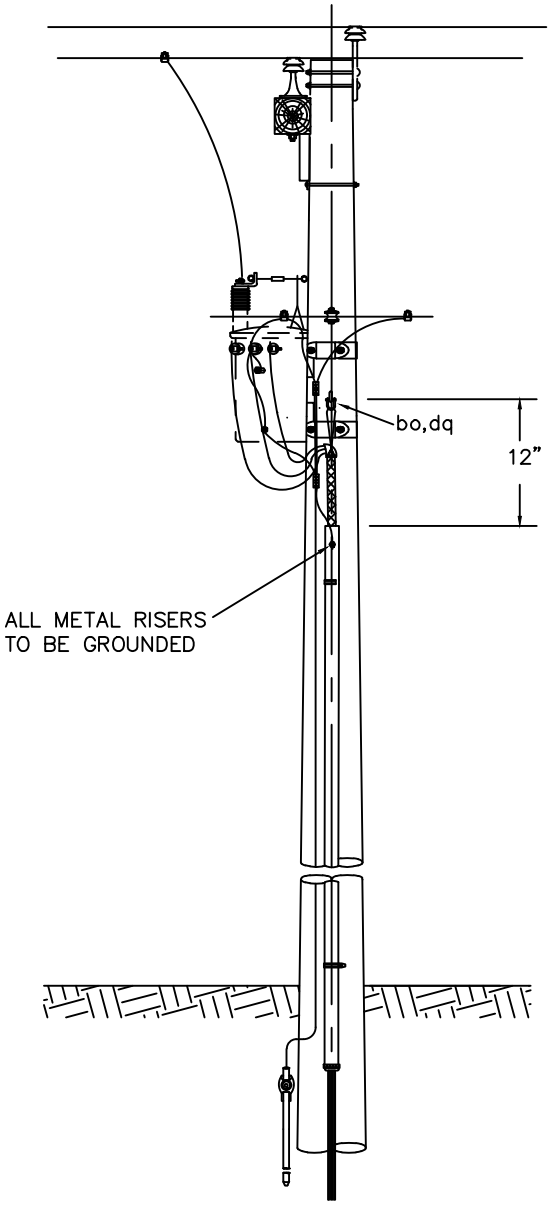

ITEM	QTY.	MATERIAL
bo	1	Shackle, anchor
dq	1	Eye Screw, Elliptical or Drive Hook
Uhc	1	Cable Support

NOTES:

1. ALLOW MINIMUM CABLE SLACK OF 24" AT BOTTOM OF RISER.
2. ADD UP7 UNIT TO COMPLETE CABLE PROTECTION FOR THIS UNIT.

SECONDARY CABLE RISER POLE
WITHOUT METER BASE

AUG 2016		
RUS		UK1.1

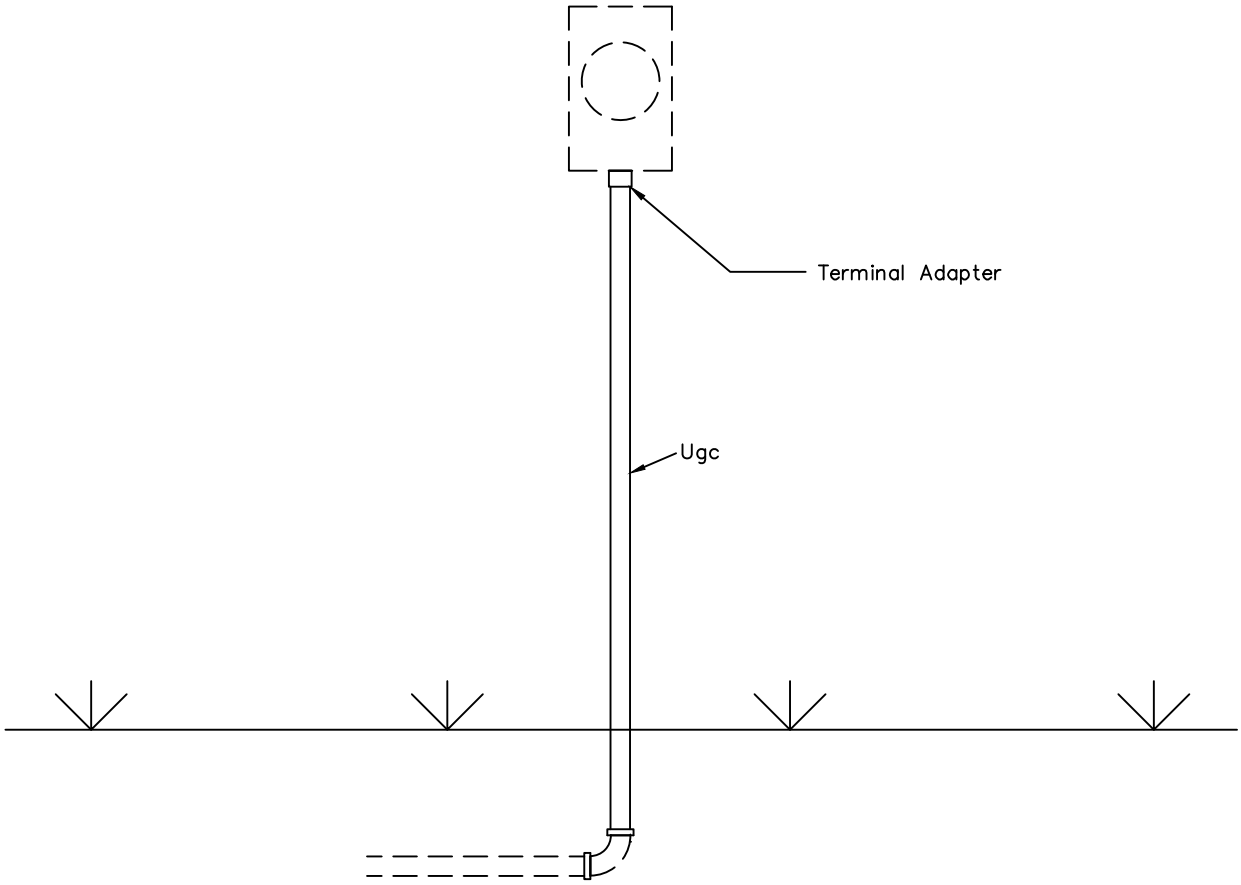

ITEM	QTY.	MATERIAL
Ugc		Conduit, as required
	1	Conduit terminal adapter

SECONDARY RISER
BOTTOM CONNECTION

AUG 2016		
RUS		UK2.1

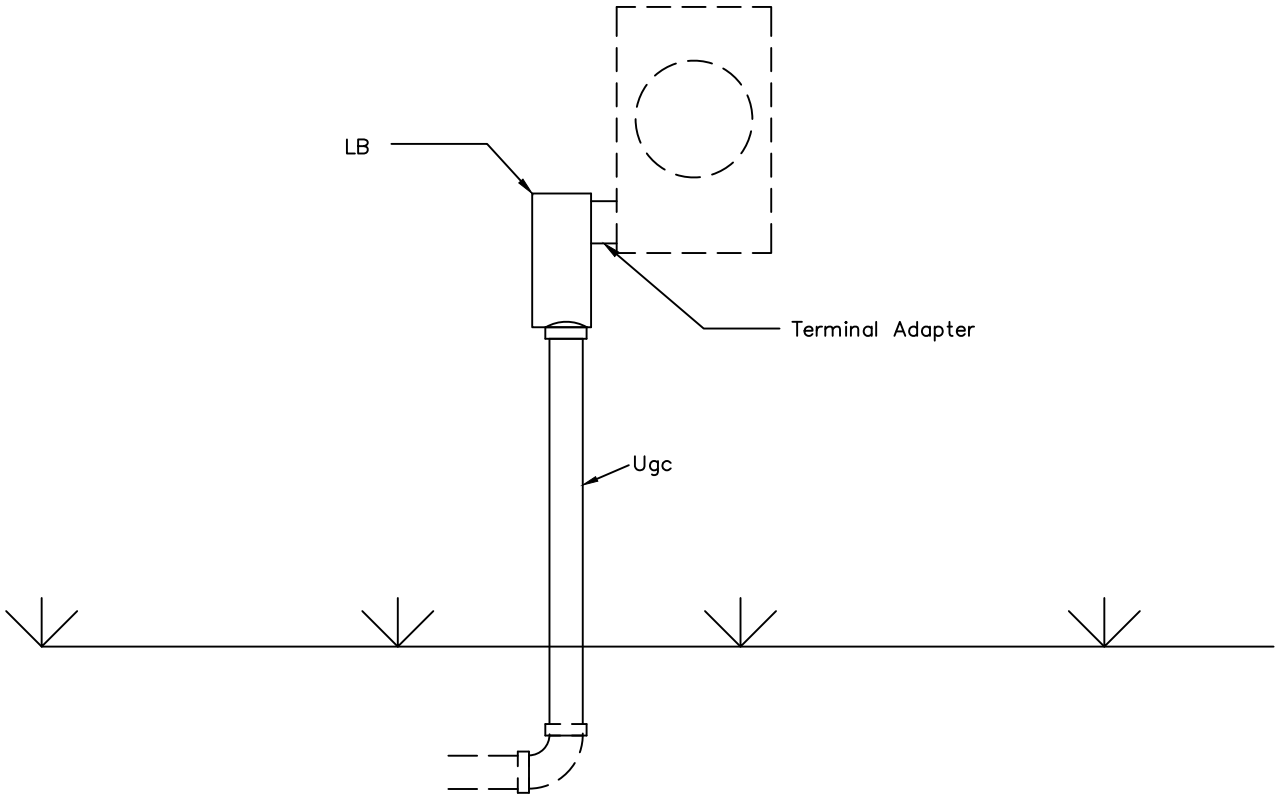

ITEM	QTY.	MATERIAL
Ugc		Conduit, as required
	1	Conduit terminal adapter
	1	Conduit LB

SECONDARY RISER
BOTTOM SIDE CONNECTION

AUG 2016		
RUS		UK2.2

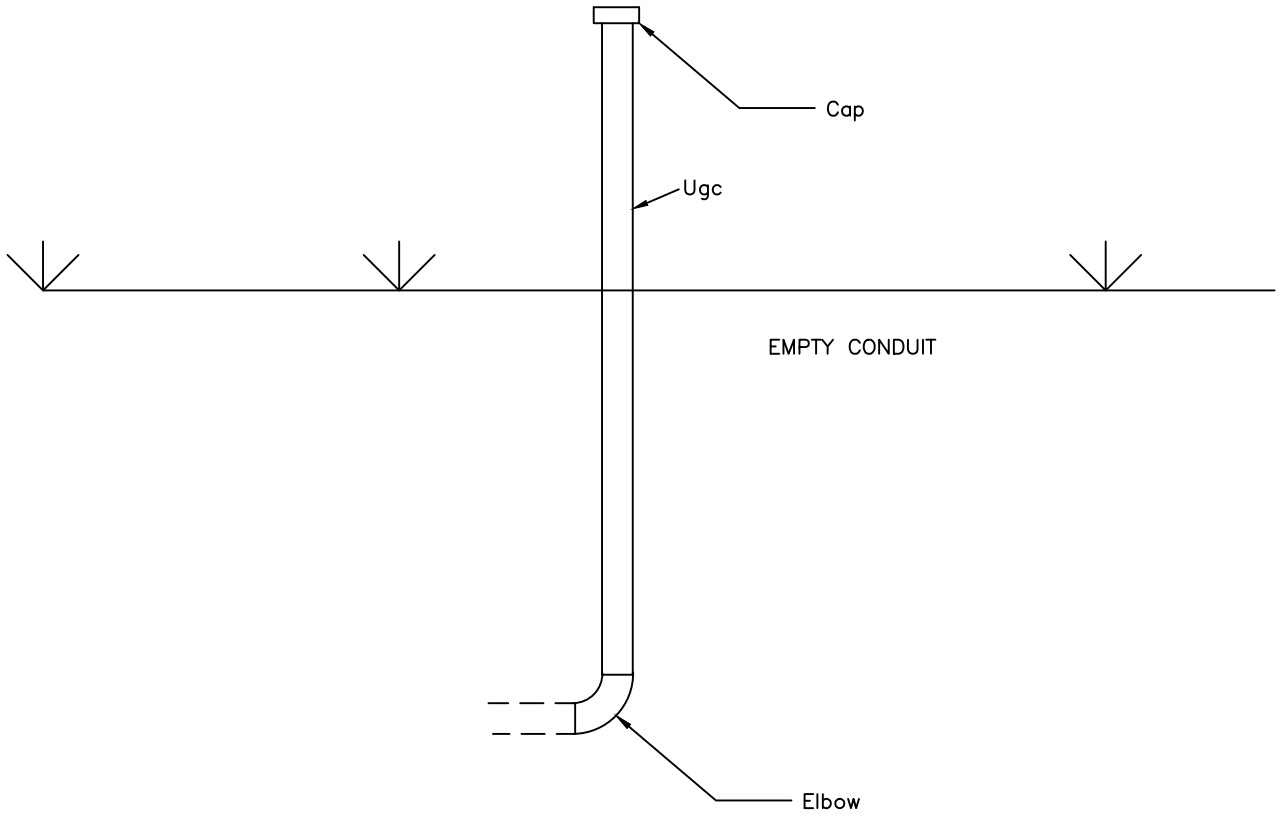

ITEM	QTY.	MATERIAL
Ugc		Conduit, as required
	1	Conduit cap
	1	Conduit elbow

TEMPORARY CONDUIT TERMINATION
WITHOUT METER BASE

AUG 2016		
RUS		UK3.1

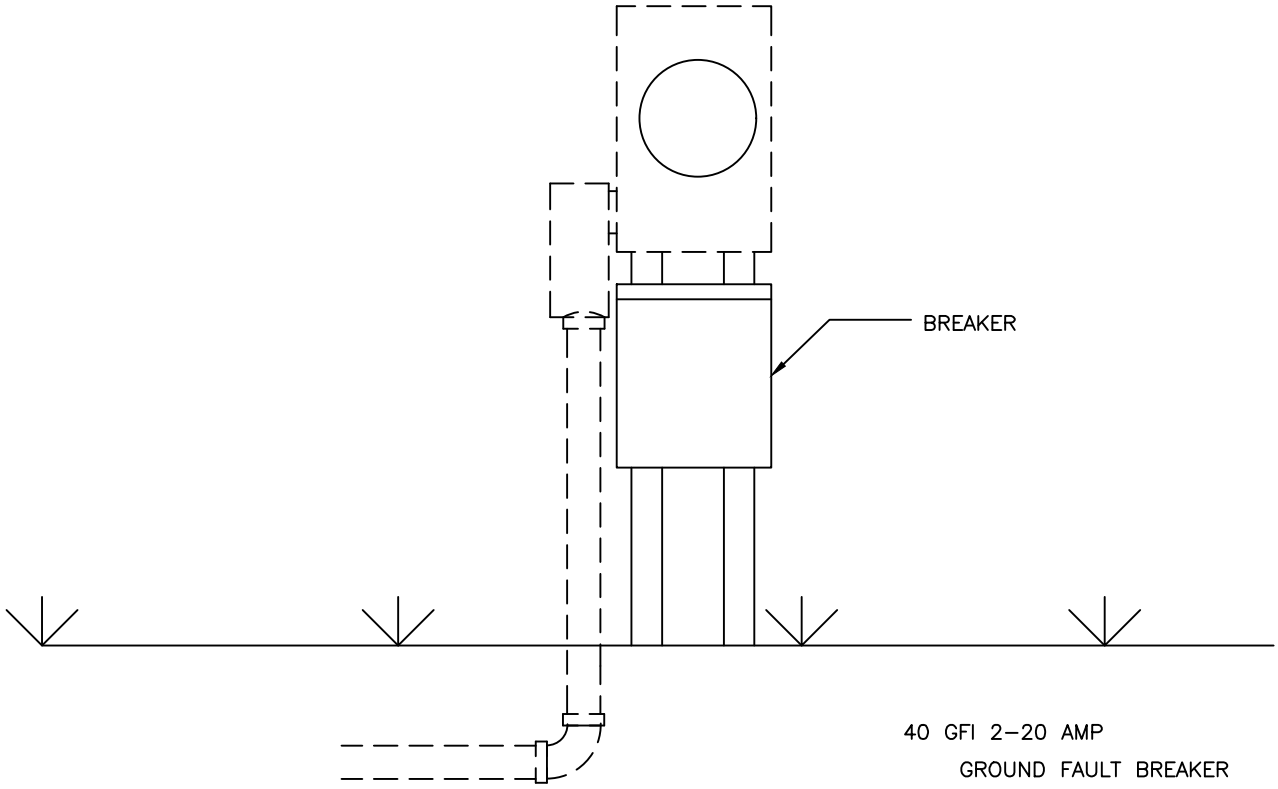

40 GFI 2–20 AMP
GROUND FAULT BREAKER
100 – 100 AMP BREAKER
200 – 200 AMP BREAKER
400 – 400 AMP BREAKER

ITEM	QTY.	MATERIAL
	1	Breaker

SECONDARY BREAKER

AUG 2016		
RUS		UK4

MISCELLANEOUS ASSEMBLY UNITS

DRAWING NUMBERS		**DRAWING TITLE (DESCRIPTION)**
1728F-806 (New)	**1728F-806** (Old)	
UM1.XX		RIGHT-OF-WAY CLEARING
UM2	(UM6-12)	CABLE ROUTE MARKER
UM3		SAFETY SIGNS
		CAPS AND PLUGS
UM6.C2	(UM6-10)	INSULATED PROTECTIVE CAP - 200 AMP LOAD BREAK
UM6.C6	(UM6-11)	INSULATED PROTECTIVE CAP - 600 AMP DEAD BREAK
UM6.PL2	(UM6-7)	BUSHING WELL PLUG - 200 AMP LOAD BREAK
UM6.PL6	(UM6-17)	INSULATING PLUG TEE CONNECTOR - 600 AMP DEAD BREAK
		ELBOWS
UM6.EL2	(UM6-1)	LOAD BREAK ELBOW - 200 AMP LOAD BREAK
UM6.EL2F	(UM6-2)	FUSED ELBOW TERMINATION - 200 AMP LOAD BREAK
UM6.EL6	(UM6-3)	DEAD BREAK ELBOW TERMINATION - 600 AMP
UM6.EL9	(UM6-3)	DEAD BREAK ELBOW TERMINATION - 900 AMP
UM6.FI	(UM6-4)	FAULT INDICATORS
		INSERTS
UM6.IN22	(UM6-5)	FEED THROUGH INSERT - 200 AMP LOAD BREAK
UM6.IN2	(UM6-13)	LOAD BREAK INSERT - 200 AMP LOAD BREAK
UM6.IN6	(UM6-14)	DEAD BREAK INSERT - 600 AMP DEAD BREAK
		MULTIPOINT JUNCTIONS
UM6.JN22	(UM6-20)	TWO POINT TERMINATION, 2-200 AMP LOAD BREAK
UM6.JN222	(UM6-21)	THREE POINT TERMINATION, 3-200 AMP LOAD BREAK
UM6.JN2222	(UM6-22)	FOUR POINT TERMINATION, 4-200 AMP LOAD BREAK
UM6.JN6226		FOUR POINT TERMINATION, 2-600 AMP DEAD BREAK AND 2-200 AMP LOAD BREAK

MISCELLANEOUS ASSEMBLY UNITS

DRAWING NUMBERS		**DRAWING TITLE (DESCRIPTION)**
1728F-806 (New)	**1728F-806** (Old)	
		PARKING STANDS
UM6.PK2	(UM6-15)	STAND OFF INSULATOR
UM6.PKGD		ONE POINT GROUND
UM6.PK22	(UM6-19)	STAND OFF INSULATOR FEED THROUGH - 200 AMP
		PRIMARY TERMINATIONS
UM6.RK		HEAT SHRINK OR COLD SHRINK TUBING
UM6.SP	(UM6-28)	IN LINE PRIMARY SPLICE
UM6.T	(UM6-24)	OUTDOOR TERMINATION
UM6.TS	(UM6-26)	INDOOR STRESS RELIEF CONE

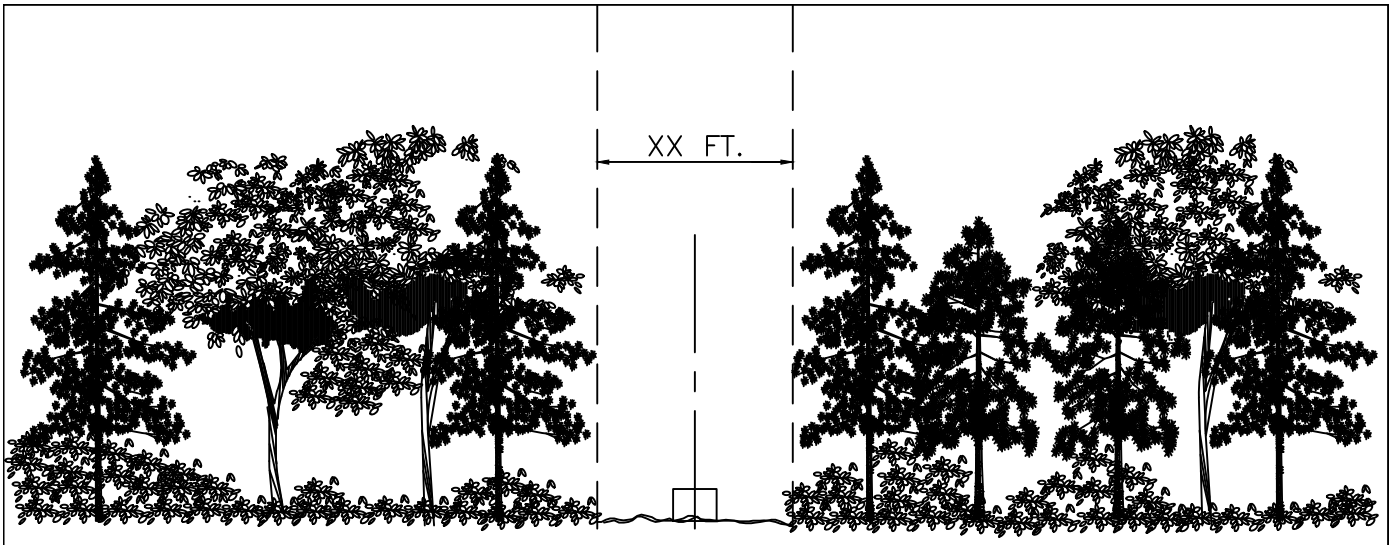

ELEVATION

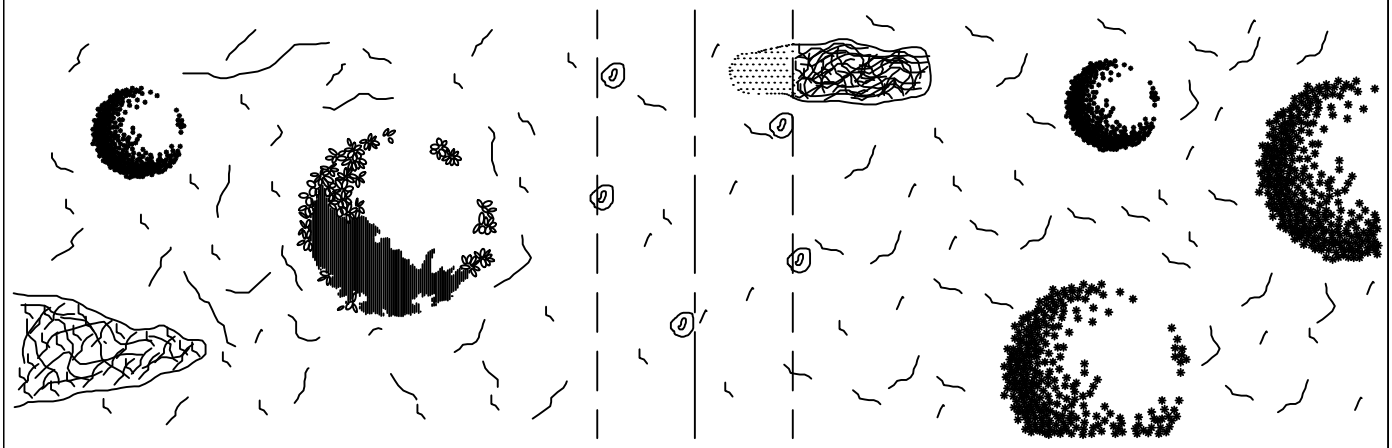

AFTER CLEARING

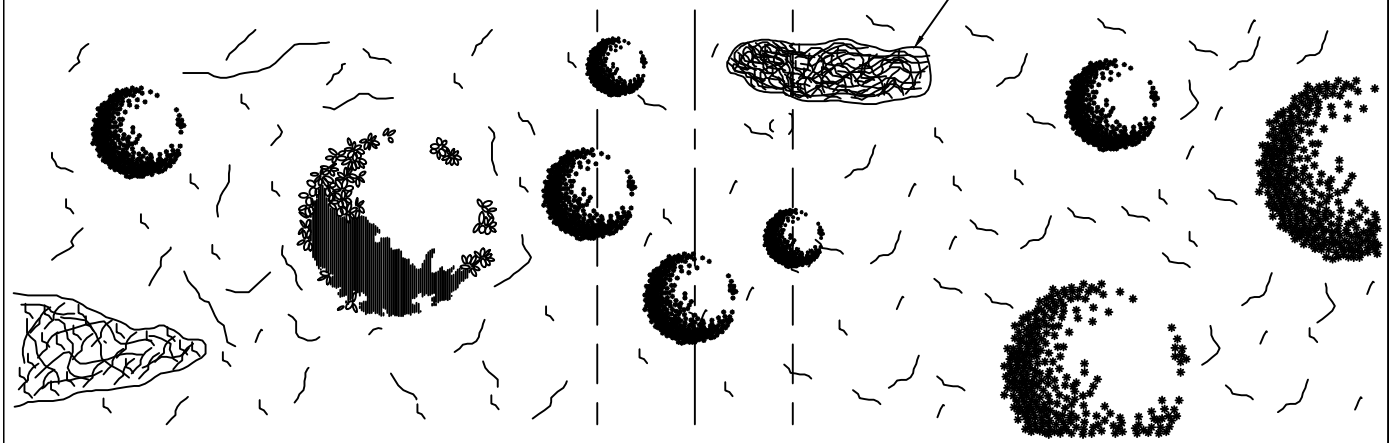

BEFORE CLEARING

NOTE:
Change suffix of drawing number to designate clearing width. (e.g. UM1.30 specifies 30 foot wide clearing).

RIGHT–OF–WAY CLEARING		
AUG 2016		
RUS		UM1.XX

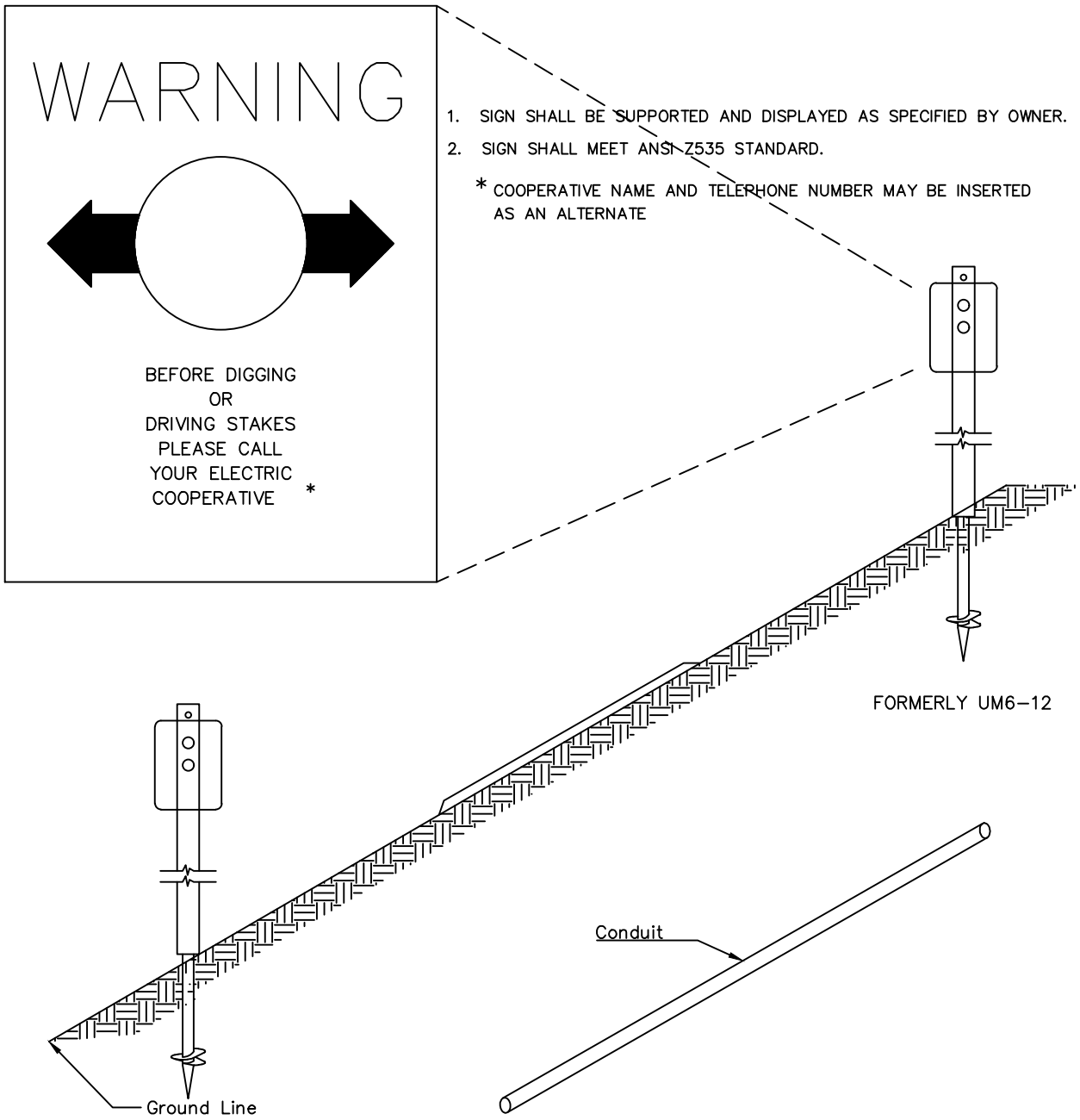

ITEM	QTY.	MATERIAL
Uhx	1	Cable Route Marker

CABLE ROUTE MARKER

AUG 2016		
RUS		UM2

DANGER
HIGH VOLTAGE

WARNING

ITEM	QTY.	MATERIAL
Uhw	1	Safety Signs

NOTES:

1. ALL SIGNAGE SHALL BE IN ACCORDANCE WITH ANSI Z535.

SAFETY SIGNS

AUG 2016		
RUS		UM3

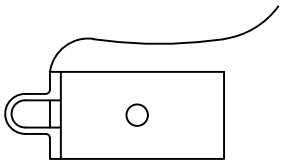

UM6.C2 INSULATED PROTECTIVE CAP
200 AMP LOAD BREAK (FORMERLY UM6–10)

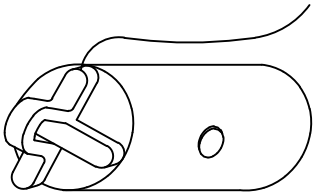

UM6.C6 INSULATED PROTECTIVE CAP
600 AMP DEAD BREAK (FORMERLY UM6–11)

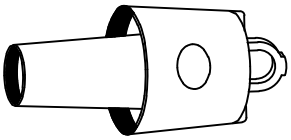

UM6.PL2 BUSHING WELL PLUG
200 AMP LOAD BREAK (FORMERLY UM6–7)

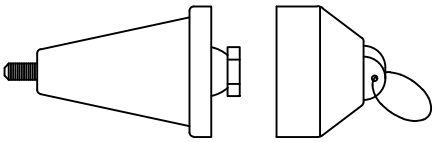

UM6.PL6 INSULATING PLUG TEE CONNECTOR
600 AMP DEAD BREAK (FORMERLY UM6–17)

NOTES:
UM6.C (CAP DESCRIPTION)
2 FOR 200 AMP LOAD BREAK CAP
6 FOR 600 AMP DEAD BREAK CAP

UM6.PL (PLUG DESCRIPTION)
2 FOR 200 AMP BUSHING WELL INSERTS
6 FOR 600 AMP TEE CONNECTOR

ITEM	MATERIAL	UM6.C2	UM6.C6	UM6.PL2	UM6.PL6
Uhb	Insulated protective cap, 200 AMP	1			
Uhb	Insulated protective cap, 600 AMP		1		
Uhb	Bushing well plug, 200 AMP			1	
Uhb	Insulating plug tee connector, 600 AMP				1

CAPS AND PLUGS

AUG 2016

RUS

UM6.C
UM6.PL

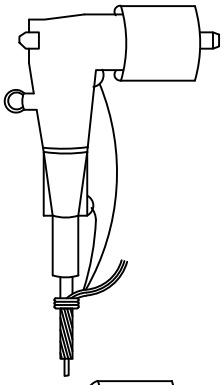

LOAD BREAK ELBOW – 200 AMP LOAD BREAK
UM6.EL2.WIRE SIZE
(FORMERLY UM6–1)

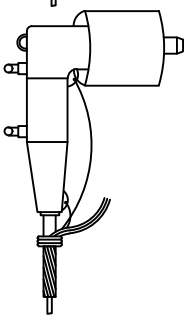

FUSED ELBOW TERMINATION 200 AMP LOAD BREAK
UM6.EL2F.FUSE SIZE.WIRE SIZE
UM6.EL2F.30.WIRE SIZE FOR 30 AMP FUSE
(FORMERLY UM6–2)

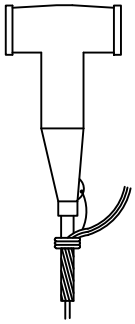

DEAD BREAK TERMINATION 600 AMP
UM6.EL6.WIRE SIZE
DEAD BREAK TERMINATION 900 AMP
UM6.EL9.WIRE SIZE
(FORMERLY UM6–3)

NOTES:
APPEND "R" SUFFIX TO INDICATE LONGER ELBOW
FOR REPAIR OR REPLACEMENT

ITEM	MATERIAL	UM6.EL2	UM6.EL2F	UM6.EL6	UM6.EL9
Uhp	Elbow, 200 AMP, load break	1			
Uhp	Fused elbow, 200 AMP, load break		1		
Uhb	Dead break termination, 600 AMP			1	
Uhb	Dead break termination, 900 AMP				1

ELBOWS

AUG 2016

RUS

UM6.EL

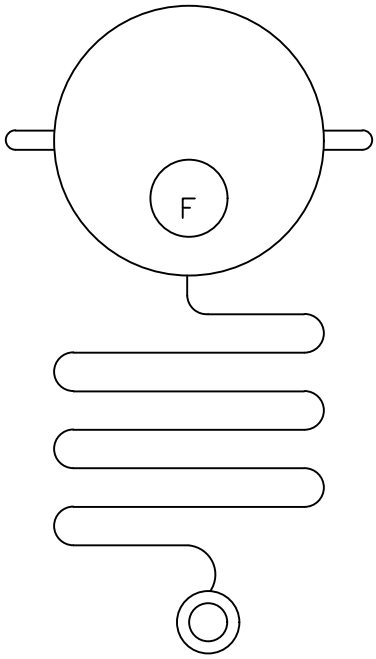

UM6.FIMR FAULT INDICATOR

(FORMERLY UM6–4)

ITEM	QTY.	MATERIAL
Ugo	1	Fault indicator

NOTES:
MR–MANUAL RESET
VR–VOLTAGE RESET
TR–TIME RESET
RR–REMOTE RESET

FAULT INDICATORS

AUG 2016		
RUS		UM6.FI

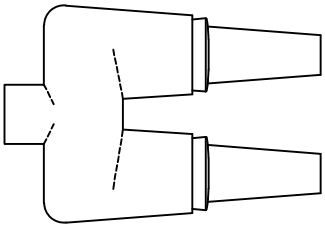

UM6.IN22 FEED THROUGH INSERT
2–200 AMP LOAD BREAK (FORMERLY UM6–5)

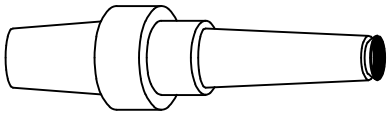

UM6.IN2 LOAD BREAK INSERT
1–200 AMP LOAD BREAK (FORMERLY UM6–13)

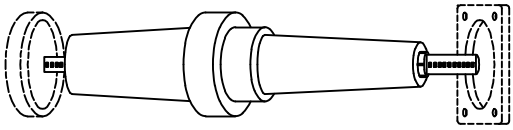

UM6.IN6
1–600 AMP DEAD BREAK INSERT
(FORMERLY UM6–14)

DEFINE THE NUMBER AND TYPE OF POINTS FOR EACH MODULE
2 FOR 200 AMP LOAD BREAK
6 FOR 600 AMP DEAD BREAK

ITEM	MATERIAL	UM6.IN22	UM6.IN2	UM6.IN6
Uhb	Feed through insert, 200 AMP	1		
Uhb	Load break insert, 200 AMP		1	
Uhb	Dead break insert, 600 AMP			1

INSERTS

AUG 2016

RUS

UM6.IN

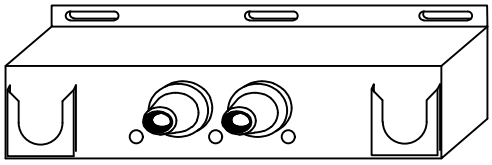

UM6.JN22 TWO POINT TERMINATION
2–200 AMP LOAD BREAK (FORMERLY UM6–20)

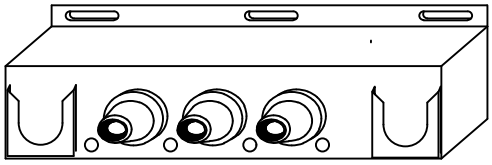

UM6.JN222 THREE POINT TERMINATION
3–200 AMP LOAD BREAK (FORMERLY UM6–21)

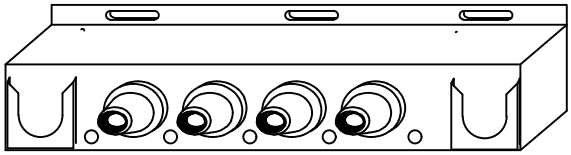

UM6.JN2222 FOUR POINT TERMINATION
4–200 AMP LOAD BREAK (FORMERLY UM6–22)

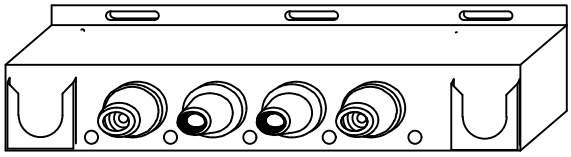

UM6.JN6226 FOUR POINT TERMINATION
2–600 AMP DEAD BREAK
2–200 AMP LOAD BREAK

ITEM	QTY.	MATERIAL
Uhq	1	Multipoint junction

DEFINE THE NUMBER OF POINTS
AND TYPE OF POINT FOR EACH MODULE
2 FOR 200 AMP LOAD BREAK
6 FOR 600 AMP DEAD BREAK
9 FOR 900 AMP DEAD BREAK

MULTIPOINT JUNCTIONS

AUG 2016

RUS

UM6.JN

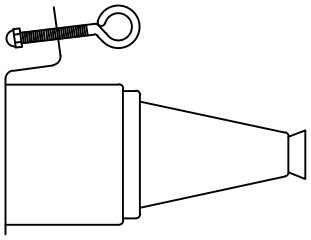

UM6.PK2 STAND OFF INSULATOR
INSULATED (FORMERLY UM6–15)

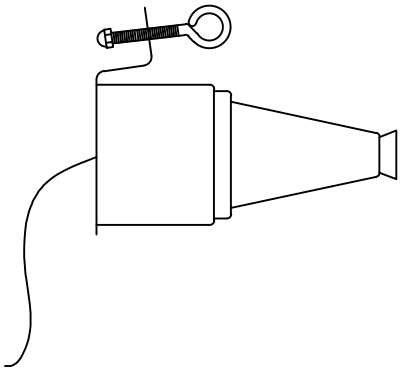

UM6.PKGD ONE POINT GROUND
GROUNDED

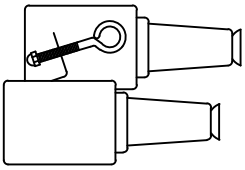

UM6.PK22 STAND–OFF INSULATOR
FEED THROUGH 200 AMP (FORMERLY UM6–19)

ITEM	QTY.	MATERIAL
Uhq	1	Parking stand

DEFINE THE NUMBER AND TYPE OF POINTS FOR EACH MODULE
2 FOR 200 AMP LOAD BREAK
6 FOR 600 AMP DEAD BREAK
GP FOR POINT WITH GROUND JUMPER
22 FOR 200 AMP FEED THROUGH

PARKING STANDS

AUG 2016		
RUS		UM6.PK

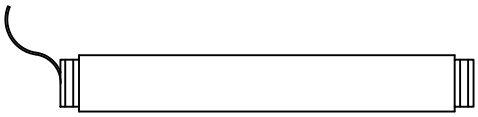

HEAT SHRINK OR
COLD SHRINK TUBING
UM6.RK

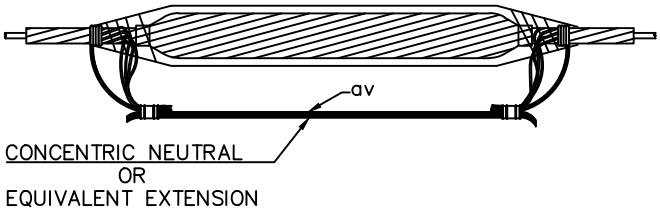

IN LINE PRIMARY SPLICE
UM6.SP.WIRE SIZE
(FORMERLY UM6–28)

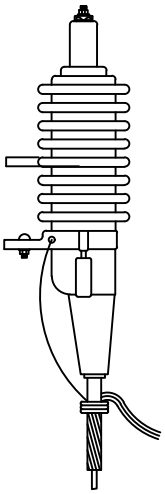

OUTDOOR TERMINATION
UM6.T.WIRE SIZE
(FORMERLY UM6–24)

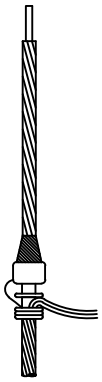

INDOOR STRESS RELIEF CONE
UM6.TS.WIRE SIZE
(FORMERLY UM6–26)

ITEM	MATERIAL	UM6.RK	UM6.SP	UM6.T	UM6.TS
Uhr	Heat Shrink or Cold Shrink Tubing	1			
Uhy	Splice, underground		1		
Ugk–2	Termination, outdoor			1	
Ugk–1	Termination, indoor				1

PRIMARY TERMINATIONS

AUG 2016

RUS

UM6.RK, UM6.SP
UM6.T, UM6.TS

OUTDOOR LIGHTING ASSEMBLY UNITS

DRAWING NUMBERS		**DRAWING TITLE (DESCRIPTION)**
1728F-806 (New)	**1728F-806** (Old)	
UO1		OUTDOOR LIGHT INSTALLATION GUIDE
UO2		LIGHT STRUCTURE INSTALLATION GUIDE

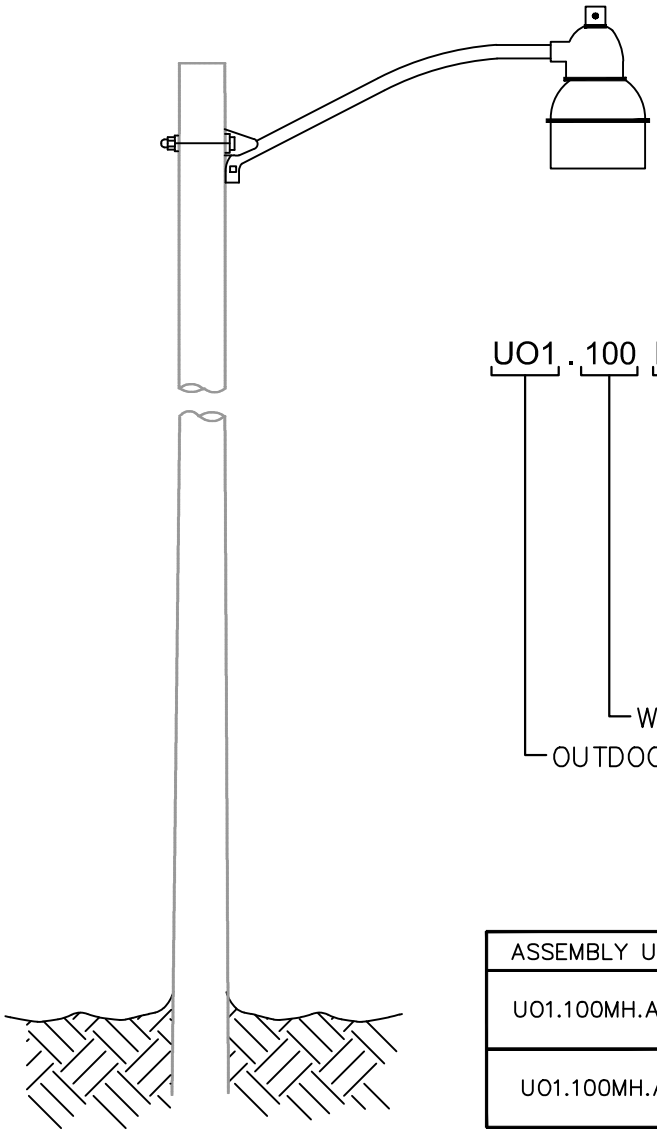

UO1 . 100 MH . A4

- A4 — STANDARD MAST WITH LENGTH
- MH — TYPE:
  - MV=MERCURY VAPOR,(RETIREMENT ONLY)
  - MH=METAL HALIDE
  - HPS=HIGH PRESSURE SODIUM
  - LPS=LOW PRESSURE SODIUM
  - LED=LIGHT EMITTING DIODE
  - IL=INDUCTIVE LAMP
  - S=SOLAR POWERED
- 100 — WATTAGE
- UO1 — OUTDOOR LIGHT ON POLE

EXAMPLES:

ASSEMBLY UNIT	DESCRIPTION
UO1.100MH.A4	100 Watt Metal Halide Outdoor Light on standard Mast
UO1.100MH.A	100 Watt Metal Halide Outdoor Light for standard Mast

	QTY.	MATERIAL
	1	Outodoor Lighting Package
		Connectors, as required

OUTDOOR LIGHT
INSTALLATION GUIDE

AUG 2016		
RUS		UO1

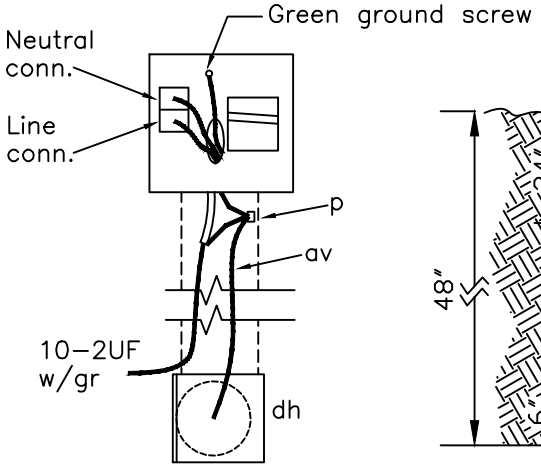

WIRING DIAGRAM

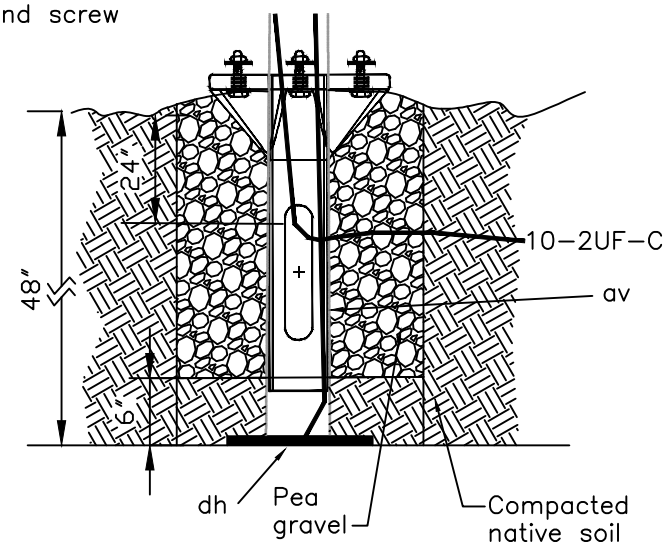

DETAIL A

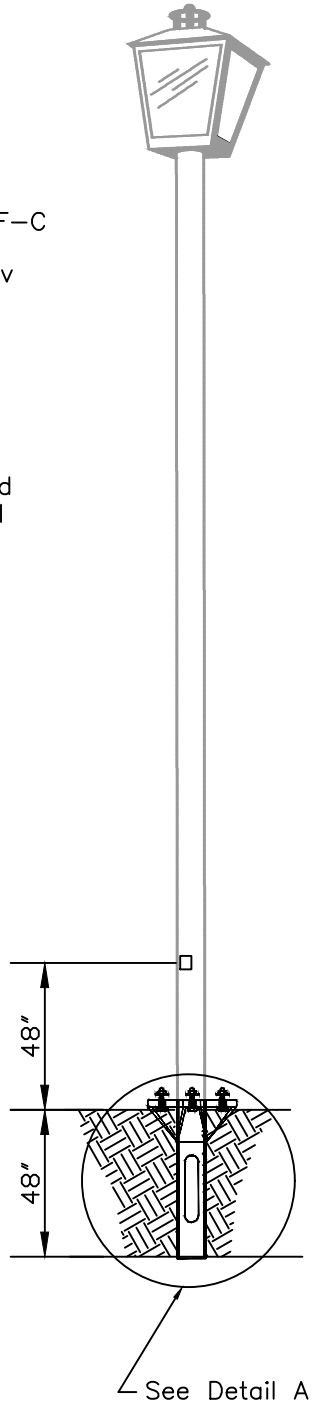

UO2 . 100 HPS . A

- A — COOPERATIVE DESIGNATION
- HPS — TYPE:
  - MV=MERCURY VAPOR,(RETIREMENT ONLY)
  - MH=METAL HALIDE
  - HPS=HIGH PRESSURE SODIUM
  - LPS=LOW PRESSURE SODIUM
  - LED=LIGHT EMITTING DIODE
  - IL=INDUCTIVE LAMP
  - S=SOLAR POWERED
- 100 — WATTAGE
- UO2 — OUTDOOR LIGHT ON POLE

EXAMPLES:

ASSEMBLY UNIT	DESCRIPTION
UO2.100HPS.A12	100 Watt High Pressure Sodium Lamp in Outdoor Light Head on 12–foot Mast on pole.
UO2.100MH.B	Custom Type "B" could equal MH decorative pole top fixture of a specific style and decorative pole to match.

ITEM	QTY.	MATERIAL
av	30	#10 THW Cu.
p	1	Connector, wire nut
dh	1	Ground plate
	1	Post/Pole Structure
	1	Photo electric control
	1	Lamp, 175w MV
		Connections as required

LIGHT STRUCTURE
INSTALLATION GUIDE

AUG 2016		
RUS		UO2

SYSTEM PROTECTION ASSEMBLY UNITS

DRAWING NUMBERS		**DRAWING TITLE (DESCRIPTION)**
1728F-806 (New)	**1728F-806** (Old)	
		ARRESTERS
UP1	(UM6-33)	RISER POLE ARRESTER
UP2	(UM6-34)	ELBOW ARRESTER
UP3	(UM6-38)	BUSHING ARRESTER
		ARRESTERS AND ANODES
UP4	(UM6-37)	PARKING STAND ARRESTER
UP5	(UM27-1,-2,-3) (UM28)	SACRIFICAL ANODES
UP7.01	(UM6-8)	RISER SHIELD
UP7.02	(UM6-18)	BACK PLATE
UP7.03	(UM6-9)	CONDUIT CABLE RISER
UP7.04		CONDUIT ELBOW
UP7.B1		SINGLE CONDUIT RISER WITH STAND-OFF BRACKETS
UP7.B2		TWO CONDUIT RISER WITH STAND-OFF BRACKETS
UP7.B3		THREE CONDUIT RISER WITH STAND-OFF BRACKETS
UP7.C		STRAP ATTACHED CONDUIT RISER
UP7.FC		FLEX CONDUIT RISER
UP7.UG		U-GUARD RISER
UP8		UNDERGROUND CONDUIT

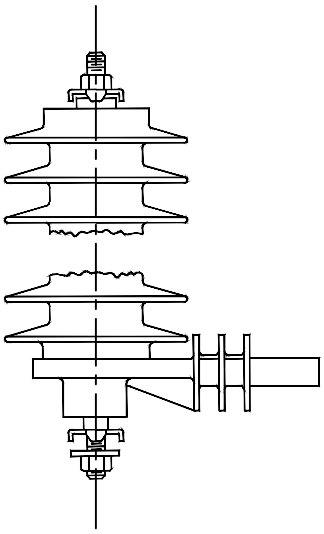

UP1 – RISER POLE ARRESTER

UP1 . X

- X: 01=SUBUNIT ARRESTER ONLY
- X: 1=REPLACE OH SINGLE ARRESTER WITH RISER POLE
- X: 3=REPLACE OH THREE ARRESTERS WITH RISER POLE
- UP1: RISER POLE ARRESTER

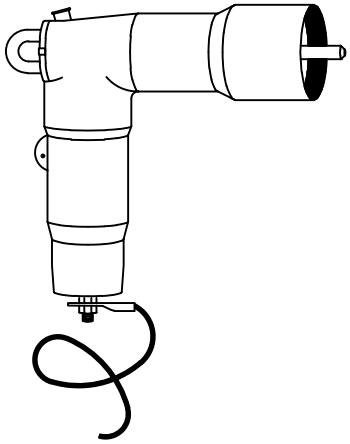

UP2 – ELBOW ARRESTER

UP2 . X

- X: 2=200 AMP LOAD BREAK
- UP2: ELBOW ARRESTER

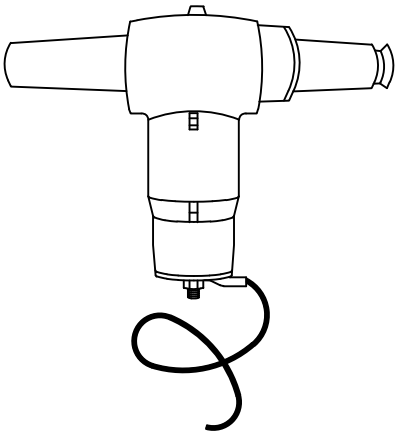

UP3 – BUSHING ARRESTER

UP3 . X

- X: 2=LOAD BREAK INTERFACE
- X: 6=DEAD BREAK INTERFACE
- UP3: BUSHING ARRESTER

ARRESTERS		
AUG 2016		UP1, UP2
RUS		UP3

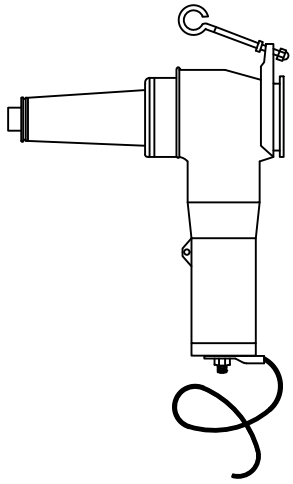

UP4 – PARKING STAND ARRESTER

UP4 . X

2=LOAD BREAK INTERFACE

6=DEAD BREAK INTERFACE

BUSHING ARRESTER

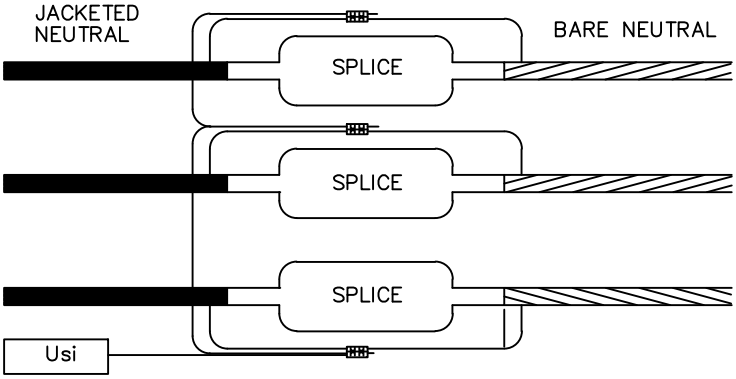

UP5 – SACRIFICIAL ANODES

UP5 . X

1=TEST STATION

2=AT 3 PH SPLICE

3=PAD MOUNTED EQUIP.

4=AT GROUND ROD

SACRIFICIAL ANODE

ARRESTERS AND ANODES		
AUG 2016		UP4
RUS		UP5

UP7.01
RISER SHIELD (U GUARD)
(FORMERLY UM6–8)

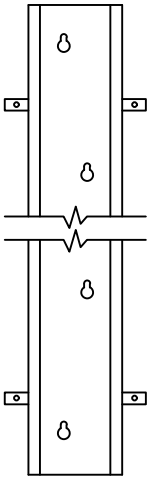

UP7.02
BACKING PLATE FOR
U–GUARD RISER SHIELD
(FORMERLY UM6–18)

UP7.03
CONDUIT CABLE RISER
(FORMERLY UM6–9)

ITEM	MATERIAL	UP7.01	UP7.02	UP7.03
	Riser shield	1		
	Riser shield, back plate		1	
	Conduit riser			1

RISER SHIELD
BACK PLATE
CONDUIT CABLE RISER

AUG 2016

RUS

UP7.01
UP7.02, UP7.03

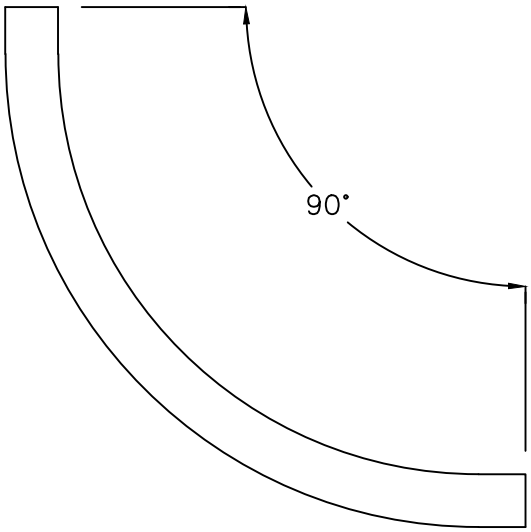

UP7.04.90

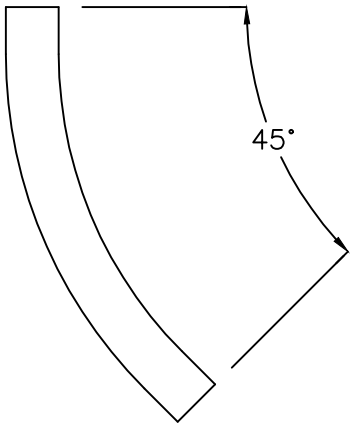

UP7.04.45

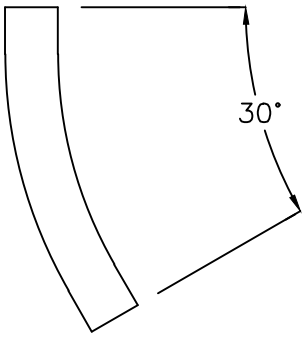

UP7.04.30

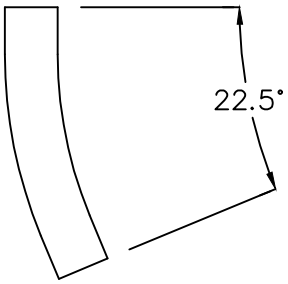

UP7.04.22

ITEM	QTY.	MATERIAL
	1	Conduit, elbow

DESIGN PARAMETERS:

SEE SECTION 8.1 FOR MINIMUM BENDING RADIUS.

CONDUIT ELBOW

AUG 2016		
RUS		UP7.04

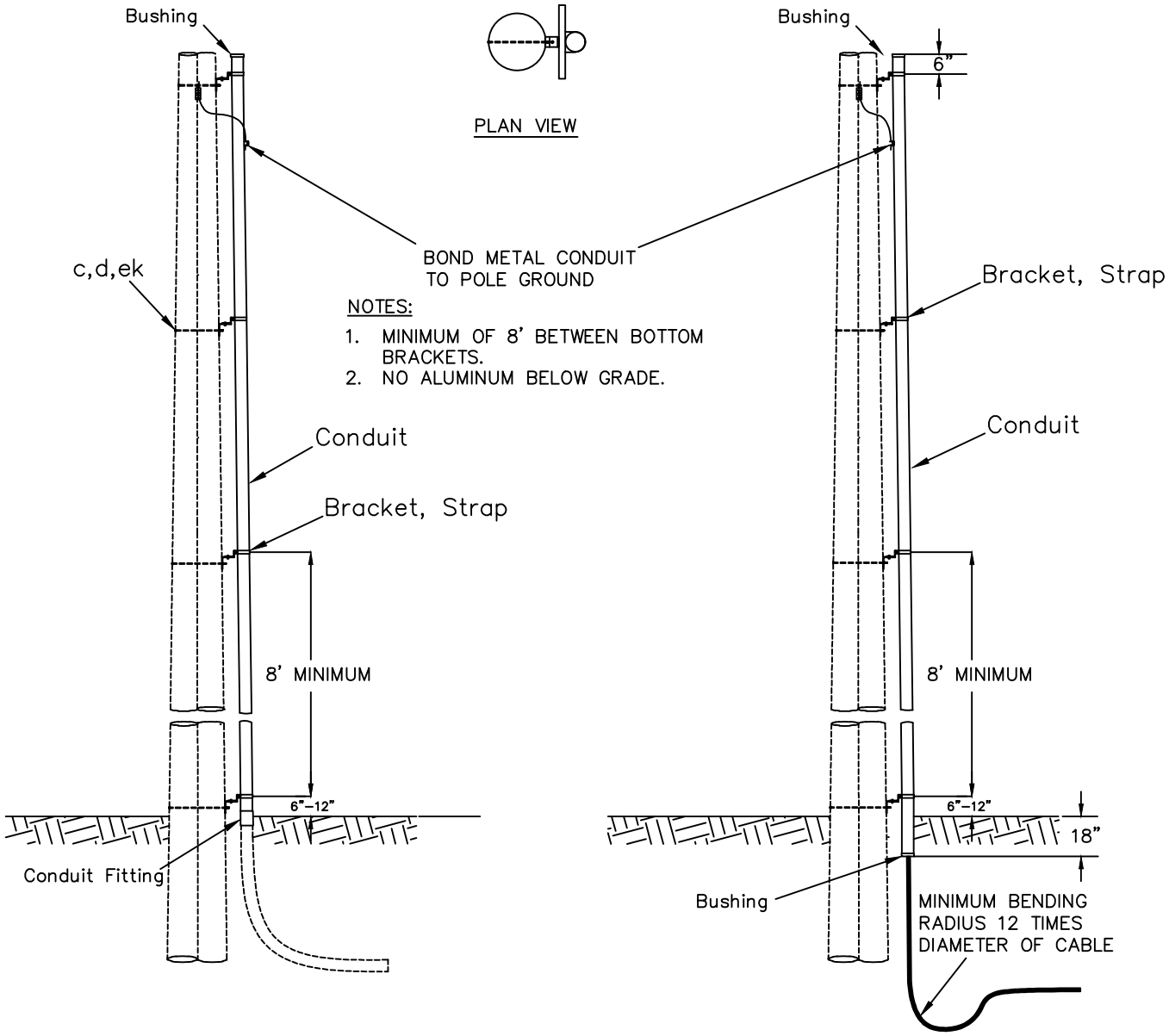

NOTES:

1. MINIMUM OF 8' BETWEEN BOTTOM BRACKETS.
2. NO ALUMINUM BELOW GRADE.

ITEM	QTY.	MATERIAL
		Bracket, Single, as required
		Conduit strap, as required
c		Bolt, machine, 5/8 x required length.
d		Washer, square 2 1/4".
ek		Locknuts, as required.
		Conduit, as required.
		Bushing, as required
		Conduit fitting, as required.

SINGLE CONDUIT RISER WITH
STAND–OFF BRACKETS

AUG 2016		
RUS		UP7.B1

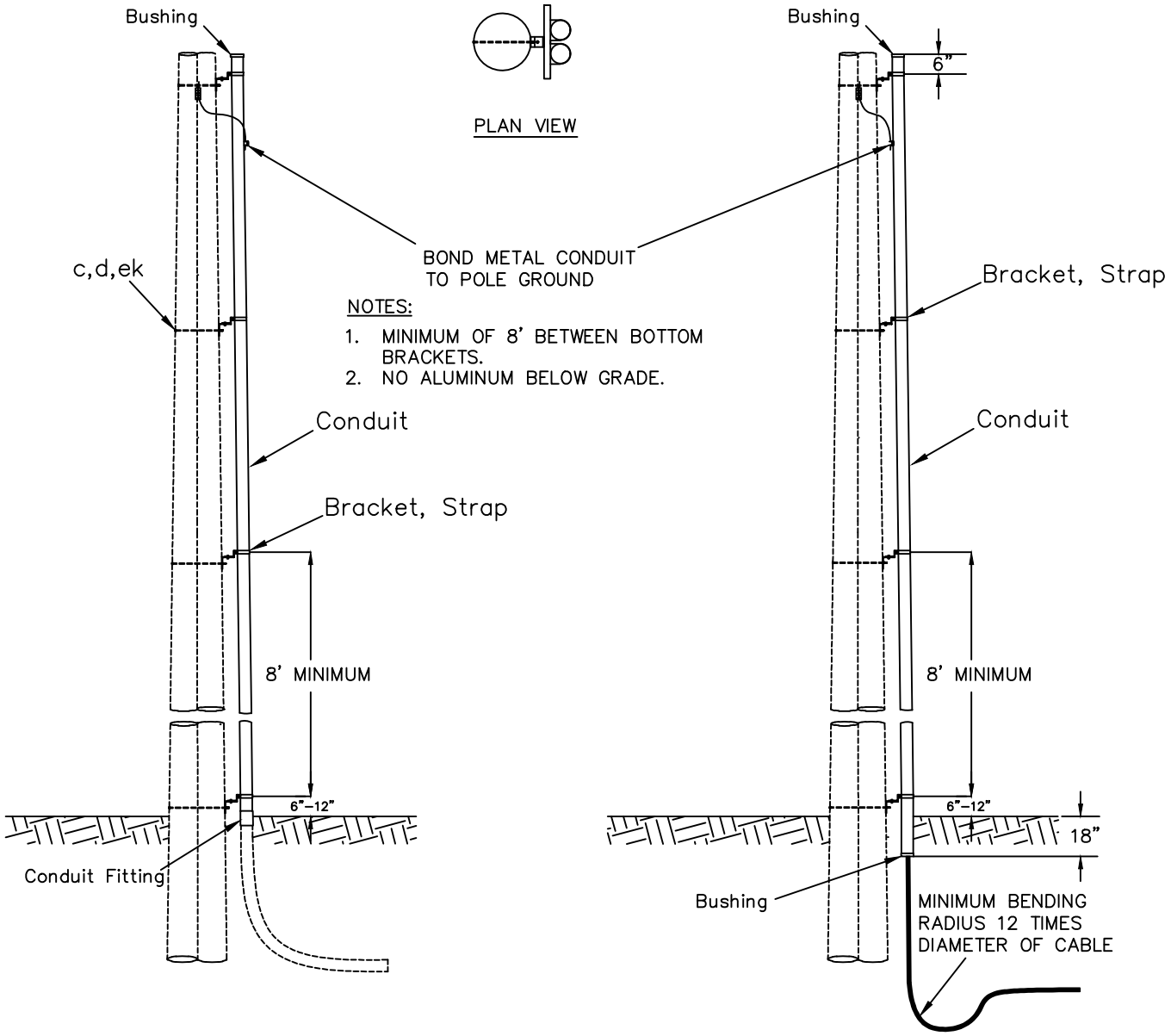

ITEM	QTY.	MATERIAL
		Bracket, Multiple, as required
		Conduit strap, as required
c		Bolt, machine, 5/8 x required length.
d		Washer, square 2 1/4".
ek		Locknuts, as required.
		Conduit, as required.
		Bushing, as required
		Conduit fitting, as required.

TWO CONDUIT RISER WITH
STAND–OFF BRACKETS

AUG 2016		
RUS		UP7.B2

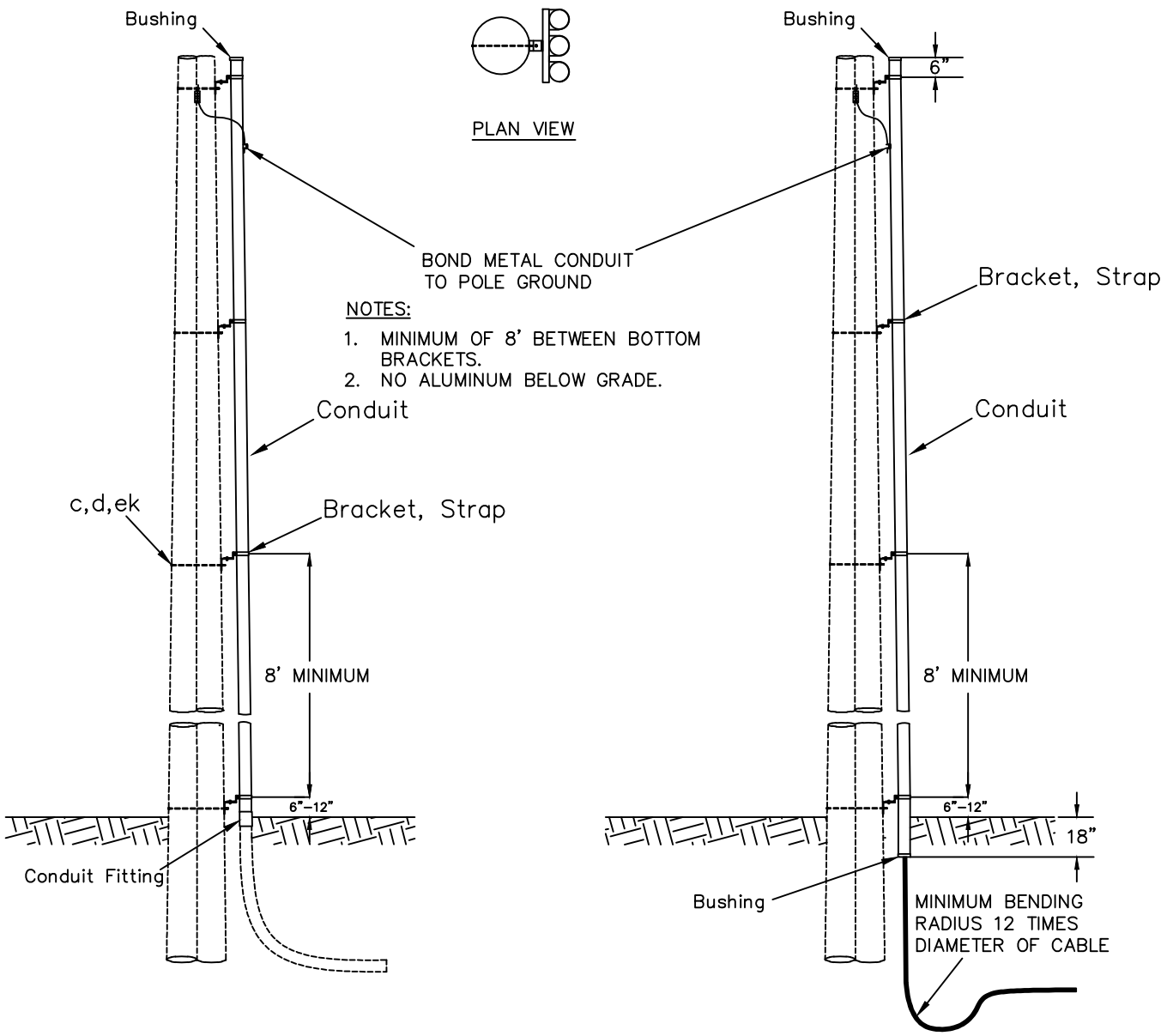

ITEM	QTY.	MATERIAL
		Bracket, Multiple, as required
		Conduit strap, as required
c		Bolt, machine, 5/8 x required length.
d		Washer, square 2 1/4".
ek		Locknuts, as required.
		Conduit, as required.
		Bushing, as required
		Conduit fitting, as required.

THREE CONDUIT RISER WITH
STAND–OFF BRACKETS

AUG 2016		
RUS		UP7.B3

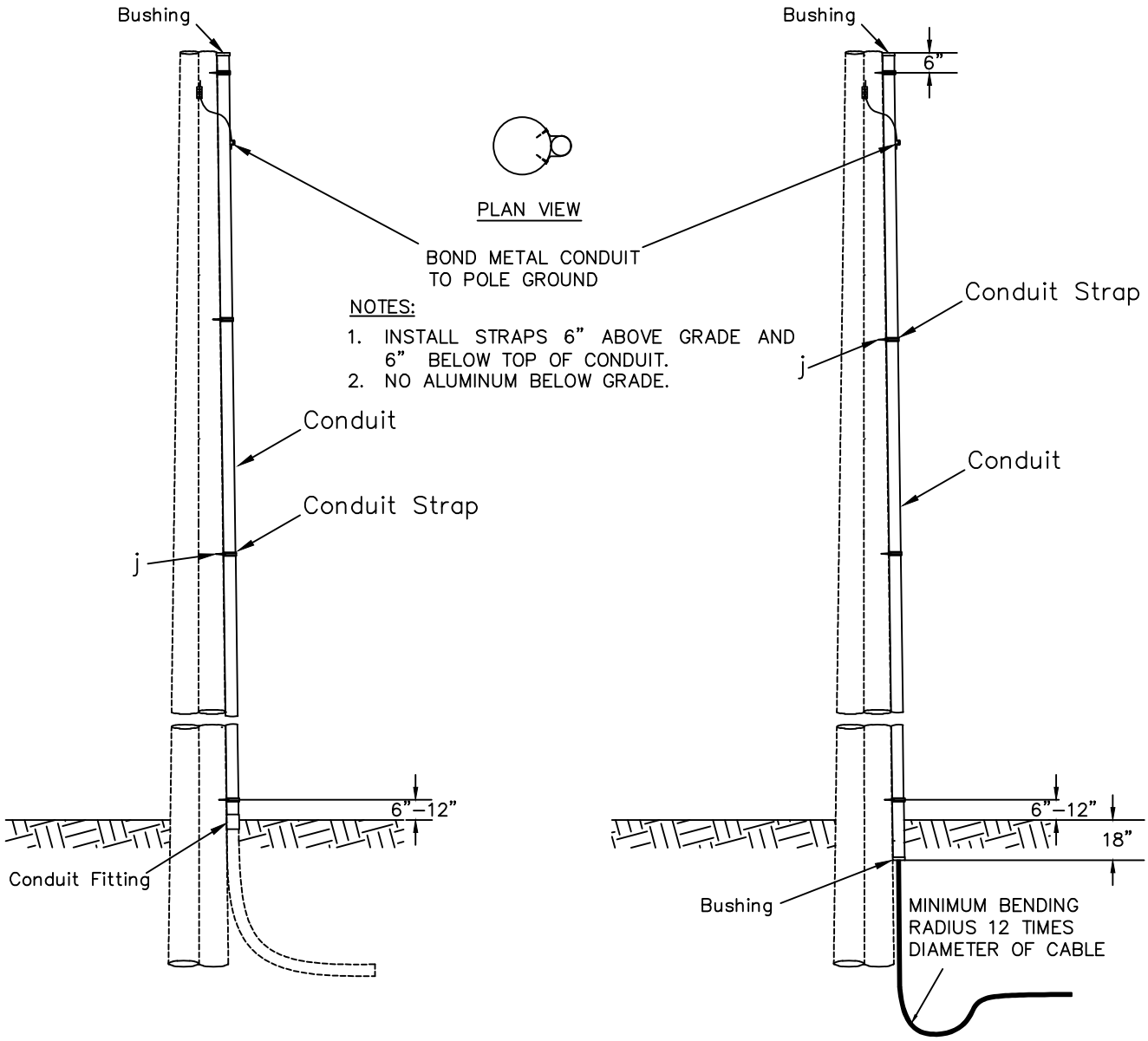

ITEM	QTY.	MATERIAL
j		Screw, lag 1/2" x 4" as required
		Conduit strap, as required
		Conduit, as required.
		Bushing, as required
		Conduit fitting, as required.

STRAP ATTACHED CONDUIT
RISER

AUG 2016		
RUS		UP7.C

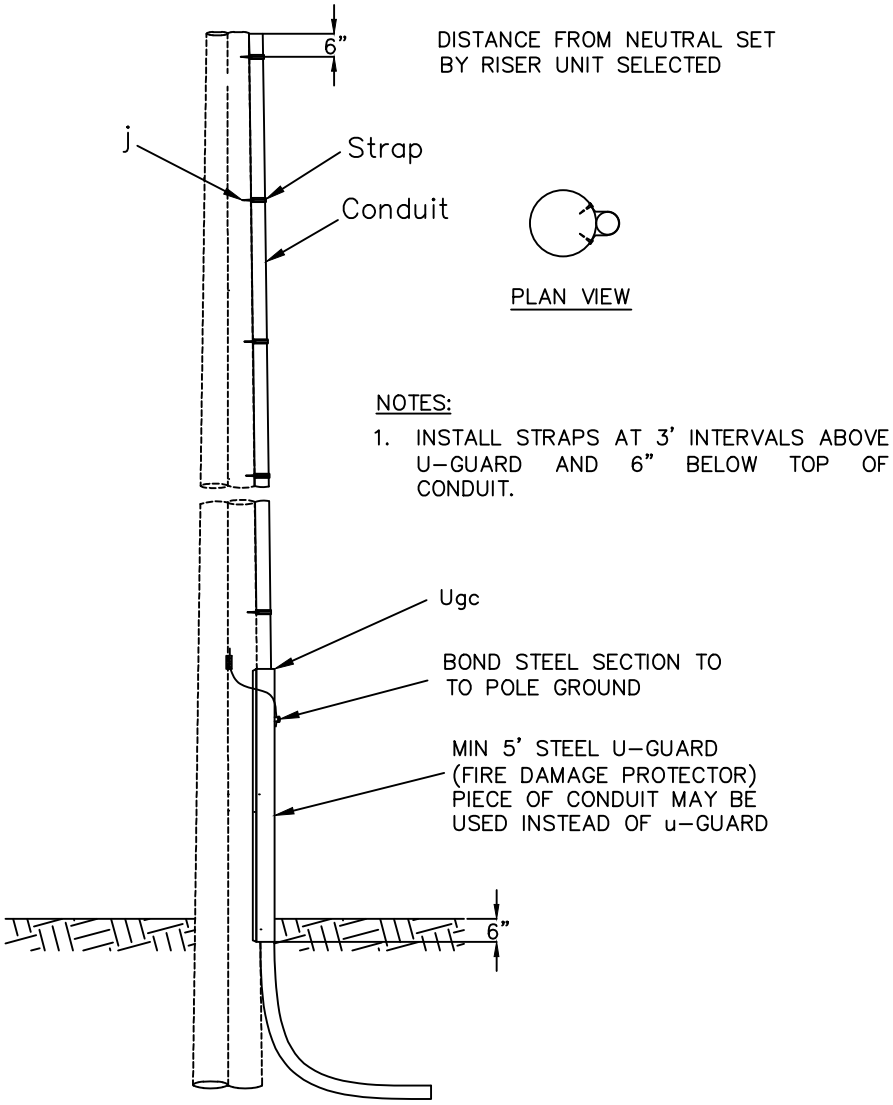

ITEM	QTY.	MATERIAL
j		Screws, lag 1/2" X 4" as required
		Conduit, as required.
		Conduit Strap as required
Ugc	5'	U-Guard,

FLEX CONDUIT RISER

AUG 2016		
RUS		UP7.FC

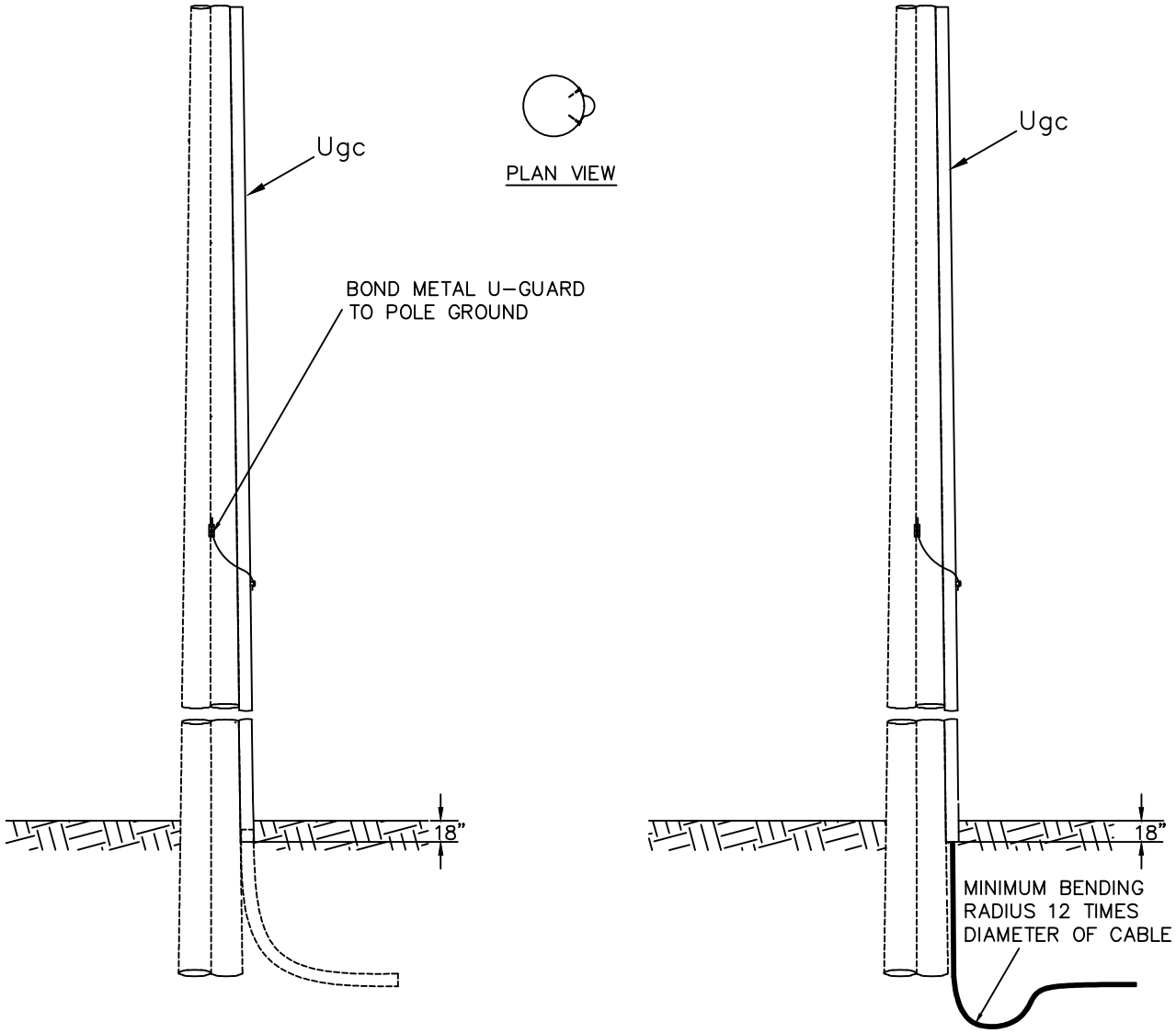

ITEM	QTY.	MATERIAL
j		Screw, lag, 1/2" x 4" as required.
Ugc		U-Guard, PVC, as required.

U-GUARD RISER

AUG 2016		
RUS		UP7.UG

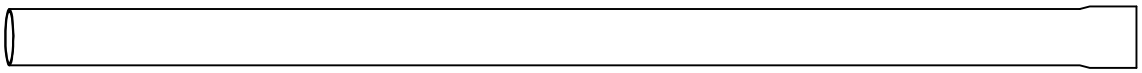

ITEM	QTY.	MATERIAL
Ugc		Conduit, Underground

UNDERGROUND CONDUIT

AUG 2016		
RUS		UP8

METERING ASSEMBLY UNITS

DRAWING NUMBERS		**DRAWING TITLE (DESCRIPTION)**
1728F-806 (New)	**1728F-806** (Old)	
UQG		METER OPTIONS GUIDE
UQ_._B_	(UM8)	METER ON BUILDING
UQ_._P_	(UM8-3,-3A)	TROUGH TYPE METER PEDESTAL
UQ_._S_	(UM8-2)	METER PEDESTAL WOOD POST
UQ_._T_	(UM8-4,-4A)	METER PEDESTAL AT TRANSFORMER

METER OPTIONS:

UQ P . T L S #

- # — NUMBER OF GANGED METERS:
  BLANK FOR ONE METER
  2–# AS REQUIRED
- S — SIZE:
  1=100 AMP BASE
  2=200 AMP BASE
  3=320 AMP BASE
  4=CT CABINT WITH KW/KWH AND KQ
- L — LOCATION:
  T=AT TRANSFORMER
  P=IN PEDESTAL
  S=SUPPORT STRUCTURE
  B=ON BUILDING
- T — TYPE:
  1=PLUG–IN
  2=CT
  3=CT AND PT
  4=BOLTED
- P — PHASE:
  1 or 3

EXAMPLES:

ASSEMBLY UNIT	DESCRIPTION
UQ1.1B24	1 phase, Plug–in, Building, 200A, 4 gang
UQ1.4S3	1 phase, Bolt–in, Support Structure, 320A
UQ1.1P12	1 phase, Plug in, Pedestal, 100A, 2 gang
UQ3.3T4	3 phase, CT & PT, At Transformer, CT cabinet
UQ3.3S2	3 phase, CT & PT, On support structure, 200A

METER OPTIONS GUIDE		
AUG 2016		
RUS		UQG

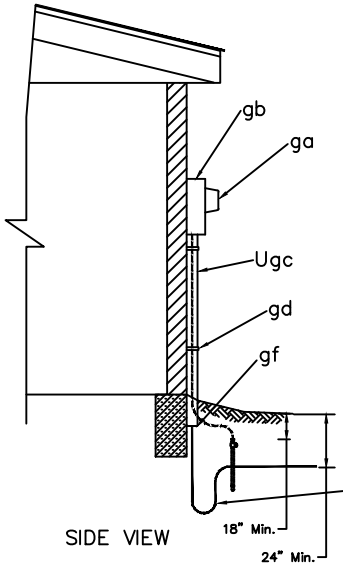

SIDE VIEW

Slack shall be provided to prevent damaging strain on the cable after backfilling. Hand tamp, preferably with pneumatic tool. Backfill with clean material.

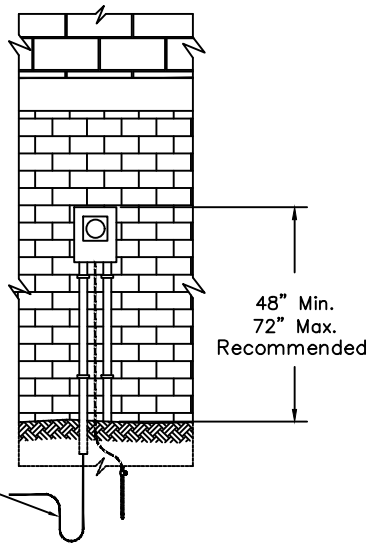

FRONT VIEW

Provide as much slack as possible in box.

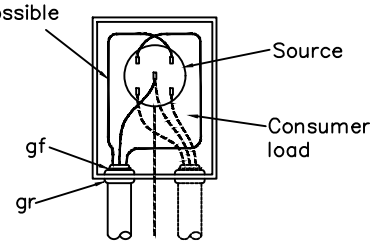

DETAIL

SHOWN: UQ1.1B2
(FORMERLY UM8)
SINGLE PHASE, PLUG–IN, ON BUILDING, 200A

AT BUILDING WILL ALSO WORK FOR THE FOLLOWING:

UQ3.2B2: THREE PHASE, CT, ON BUILDING, 200 AMP
UQ1.2B1: SINGLE PHASE, CT, ON BUILDING, 100 AMP
UQ1.4B3: SINGLE PHASE, BOLT–IN, ON BUILDING, 300 AMP

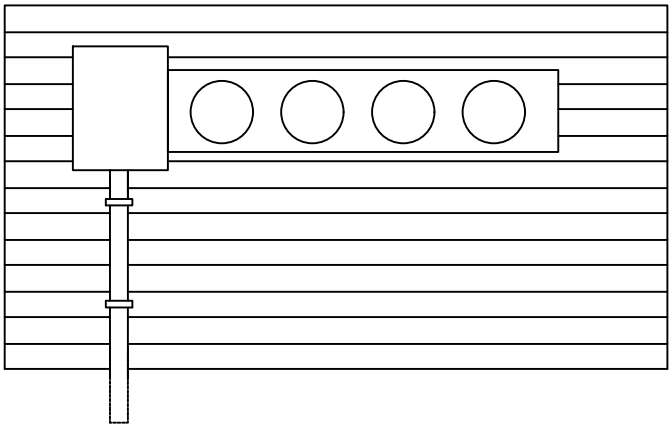

SHOWN: UQ1.1B24

SINGLE PHASE – PLUG IN–ON BUILDING–200A
4–GANG FOR QUAD–PLEX

METER ON BUILDING		
AUG 2016		
RUS		UQ_._B_

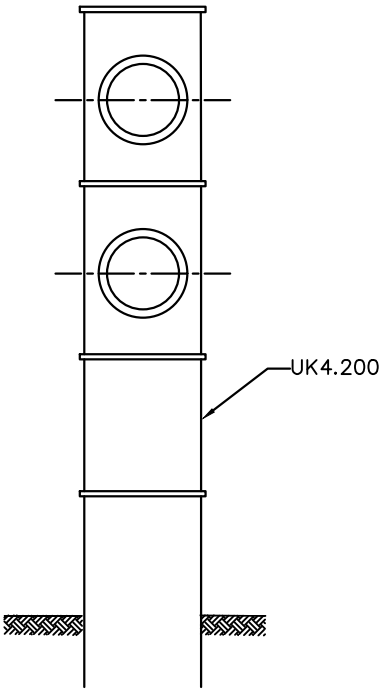

UQ1.1P22

(FORMERLY UM8–3A)

ADD BREAKERS 2–UK4.200
TO COMPLETE

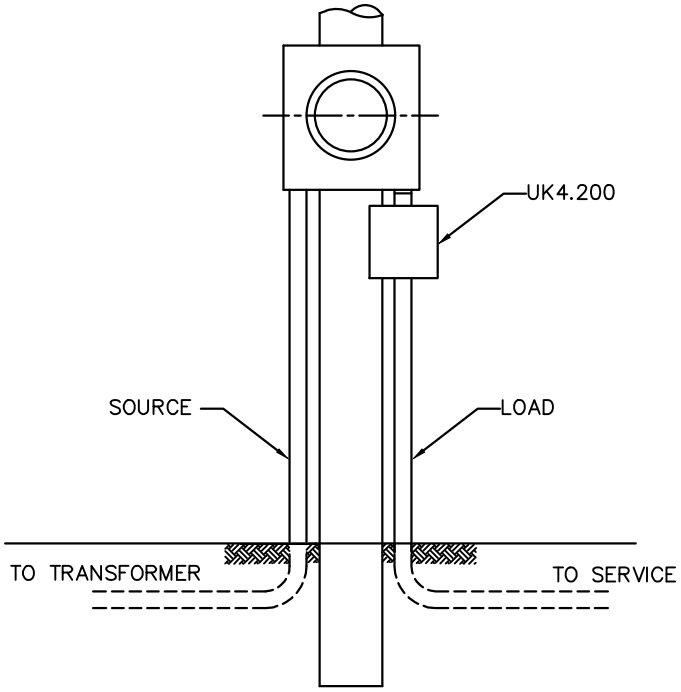

UQ1.4S2

(FORMERLY UM8–2)

ADD BREAKER UK4.320
TO COMPLETE

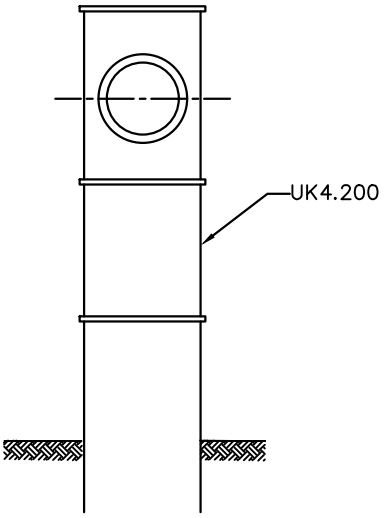

UQ1.1P2

(FORMERLY UM8–3)

ADD BREAKER UK4.200
TO COMPLETE

TROUGH TYPE METER PEDESTAL AND METER PEDESTAL WOOD POST		
AUG 2016		UQ_._P_
RUS		UQ_._S_

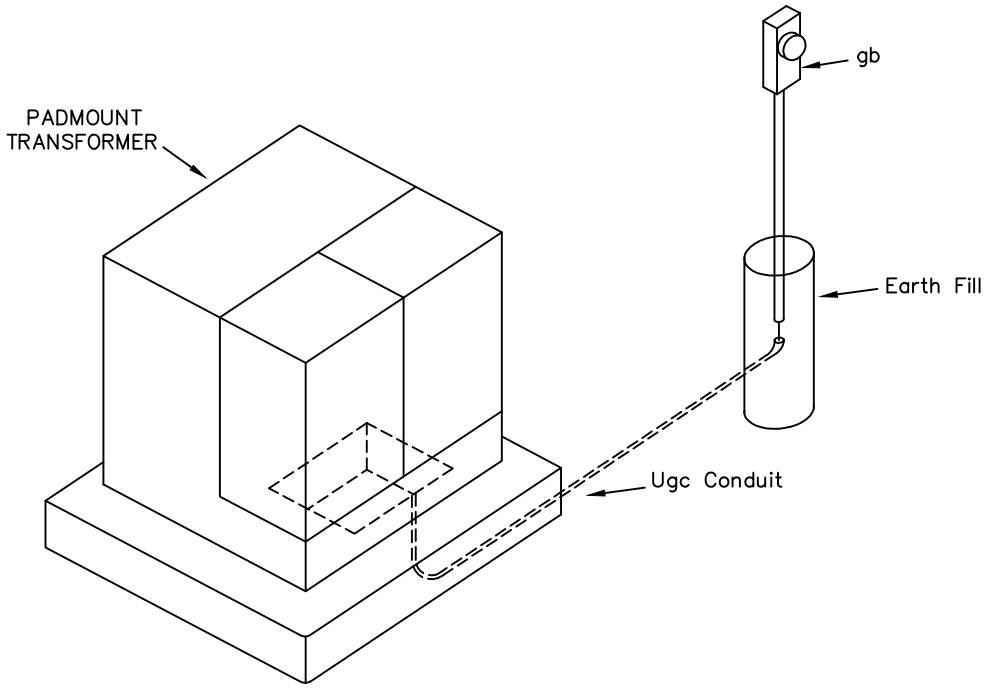

SHOWN: UQ1.2T1

SINGLE PHASE, CT, AT TRANSFORMER WITH 100 AMP METER BASE

AT TRANSFORMER LOCATION WILL ALSO WORK FOR THE FOLLOWING:

UQ3.2T1: THREE PHASE, CT, AT TRANSFORMER WITH 100 AMP METER BASE

UQ3.3T4: THREE PHASE, CT & PT, AT TRANSFORMER WITH CT CABINET

BY ADDING BREAKER (UK4.XXX) AND SECOND CONDUIT TOWARD SERVICE
THE USE OF 200 AMP AND 320 AMP BASES COULD USE THIS METHOD.

UQ1.1T2: SINGLE PHASE, PLUG–IN, AT TRANSFORMER WITH 200 AMP METER BASE

UQ1.4T3: SINGLE PHASE, BOLT–IN, AT TRANSFORMER WITH 320 AMP METER BASE

ITEM	QTY.	MATERIAL
	2	Galvanized angle support
gb	1	Meter base/CT Cabinet
		Insulated Bushings
		Conduit Locknuts
Ugc		Conduit as required

METER PEDESTAL AT TRANSFORMER

AUG 2016		
RUS		UQ_._T_

RECLOSER ASSEMBLY UNITS

DRAWING NUMBERS		**DRAWING TITLE (DESCRIPTION)**
1728F-806	**1728F-806**	
(New)	(Old)	
UR3.--		THREE PHASE PADMOUNTED RECLOSER

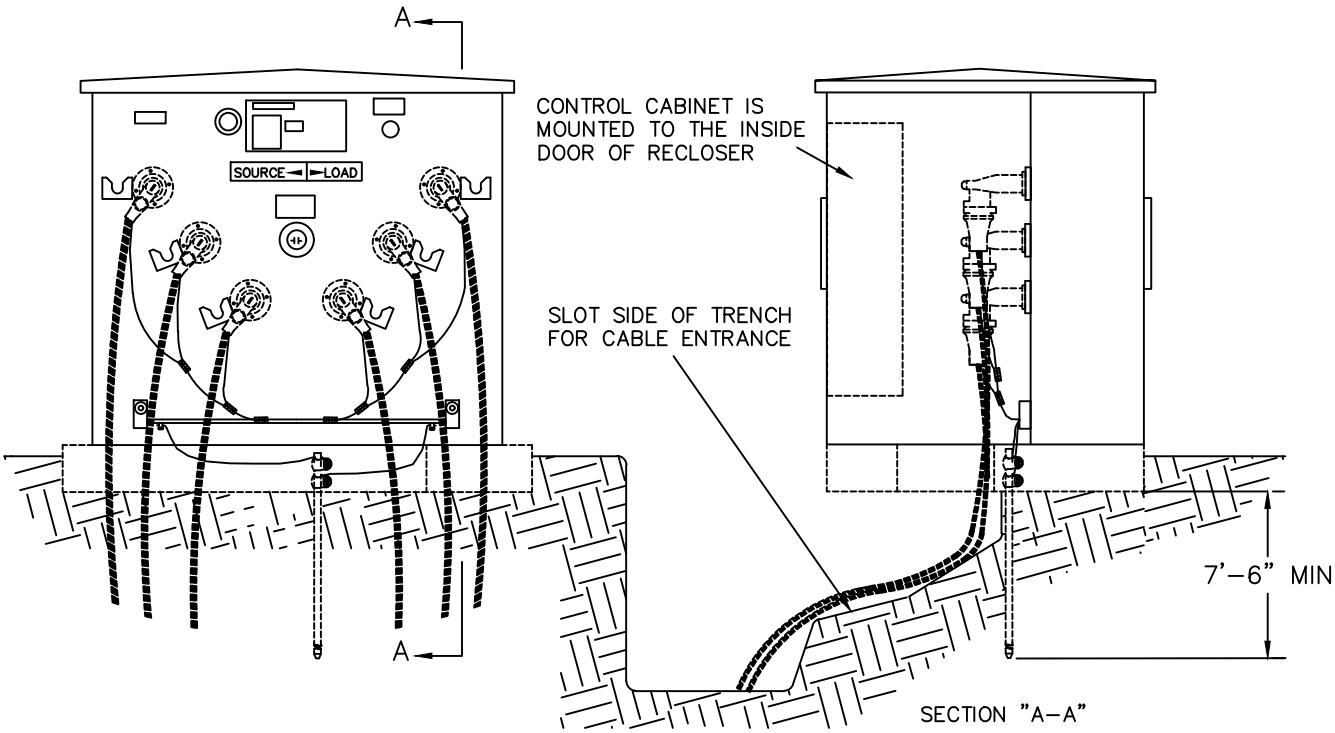

ITEM	QTY.	MATERIAL
p		Connectors, as required
av		Jumpers, as required
bu		Connector, equipment ground
Uhw	2	Safety Signs as Required

NOTES:

1. THE FOLLOWING UNITS/ASSEMBLIES ARE NOT PART OF THIS UNIT. SPECIFY SEPARATELY:

   A. MULTIPOINT TERMINATIONS AND OTHER ACCESSORIES
   B. LOADBREAK ELBOWS
   C. GROUNDING ASSEMBLY
   D. PAD ASSEMBLY

2. PROVIDE SUFFICIENT SLACK IN ALL CABLES TO PERMIT READY DISCONNECTION OF ELBOW AND MOUNTING ON PARKING STAND.

3. INSTALL SAFETY SIGN ON OUTSIDE SURFACE OF ENCLOSURE AND SAFETY SIGN ON INSIDE OF ENCLOSURE AS REQUIRED.

THREE PHASE PADMOUNTED RECLOSER

AUG 2016	3 – PHASE PRIMARY	
RUS		UR3.--

SECTIONALIZING ASSEMBLY UNITS

DRAWING NUMBERS		**DRAWING TITLE (DESCRIPTION)**
1728F-806 (New)	**1728F-806** (Old)	
US1.DC		SINGLE PHASE PADMOUNTED TRANSFORMER DEFERRED UNIT CABINET TYPE
US1.DP	(UX2)	SINGLE PHASE PADMOUNTED TRANSFORMER DEFERRED UNIT PEDESTAL TYPE
US1.DV	(UX3)	SINGLE PHASE PADMOUNTED TRANSFORMER DEFERRED UNIT PAD-SLEEVE TYPE
		SINGLE AND THREE PHASE PRIMARY JUNCTIONS
US1.PJ	(UM3-14)	SINGLE PHASE PRIMARY JUNCTION
US3.PJ	(UM33)	THREE PHASE PRIMARY JUNCTION
US_.SF_	(UM3E-_-_)	SWITCH / FUSE ENCLOSURE INSTALLATION
US1.SF_	(UM3E-1)	SINGLE POLE SWITCHING 200 AMP FUSE ENCLOSURE INSTALLATION
US2.SF_	(UM3E-2)	WIRING DIAGRAMS (SINGLE PHASE AND TWO PHASE)
US3.SF_	(UM3E-3)	FUSE ENCLOSURE (200-600 AMP) WIRING DIAGRAMS (THREE PHASE)

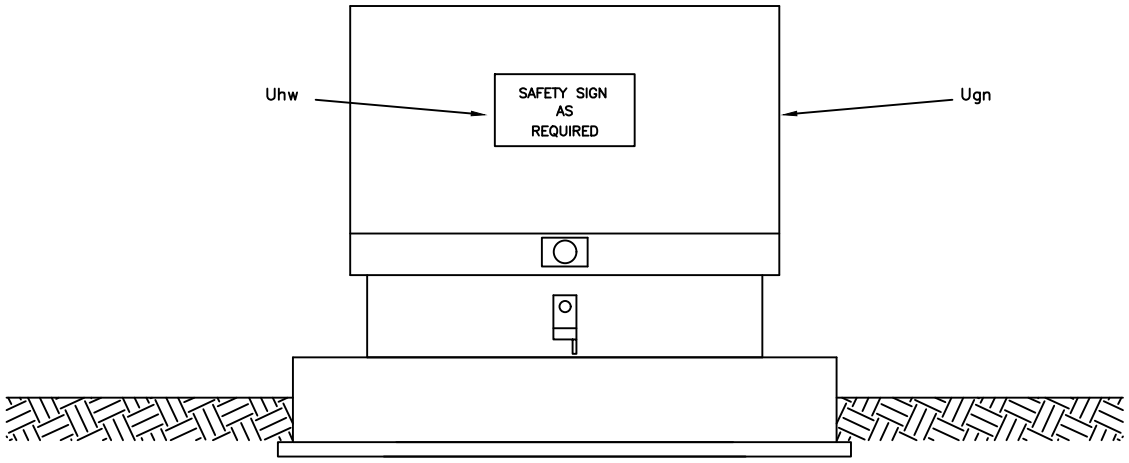

LID OPEN VIEW

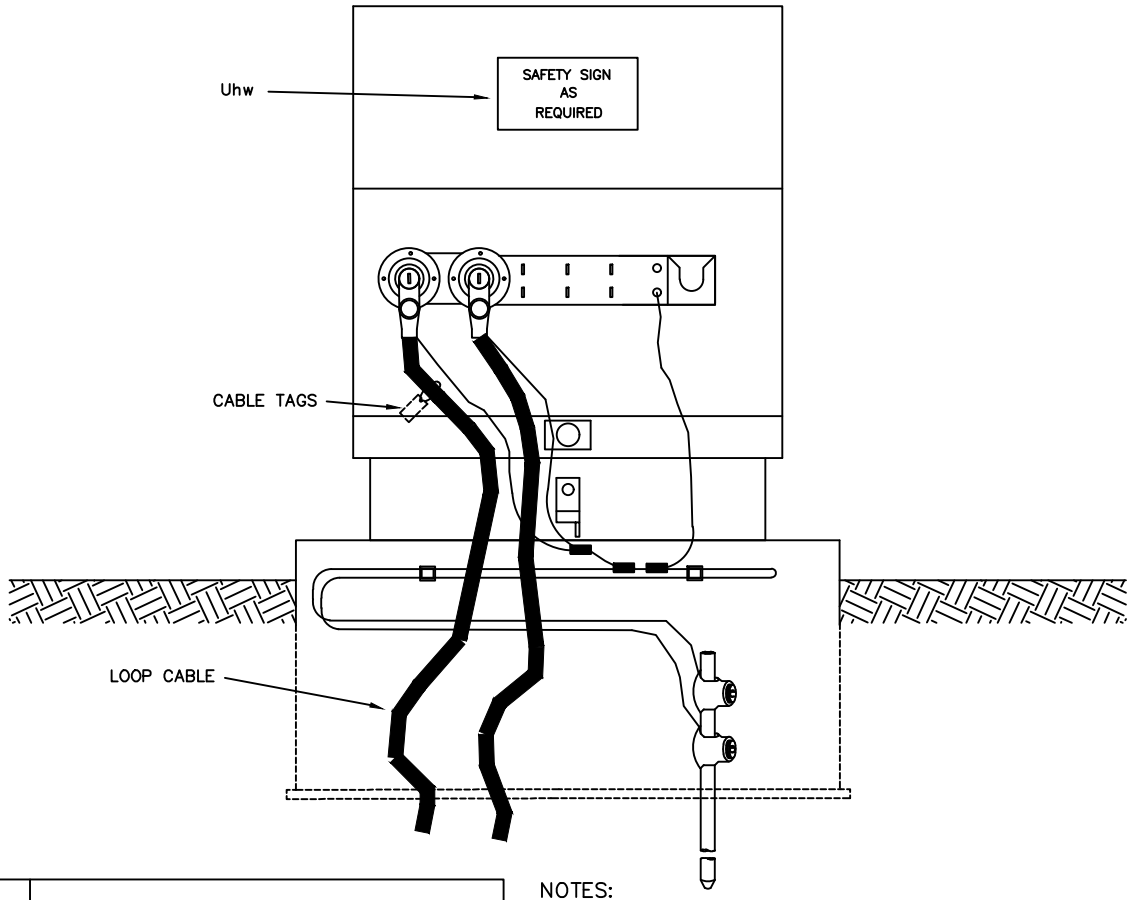

ITEM	QTY.	MATERIAL
p		Connectors, as Required
av		Jumpers, as Required
Ugn	1	Primary Junction Enclosure
Uhw	2	Safety Signs as Required

NOTES:

1. LOOP CABLE TO PROVIDE SUFFICIENT LENGTH FOR TERMINATING IN A PAD-MOUNTED TRANSFORMER.
2. INSTALL PHASING TAGS ON CABLE.
3. INSTALL WITH UH1.1
4. SPECIFY PAD UNIT SEPERATELY.

SINGLE PHASE PADMOUNTED
TRANSFORMER DEFERRED UNIT
CABINET TYPE

AUG 2016		
RUS		US1.DC

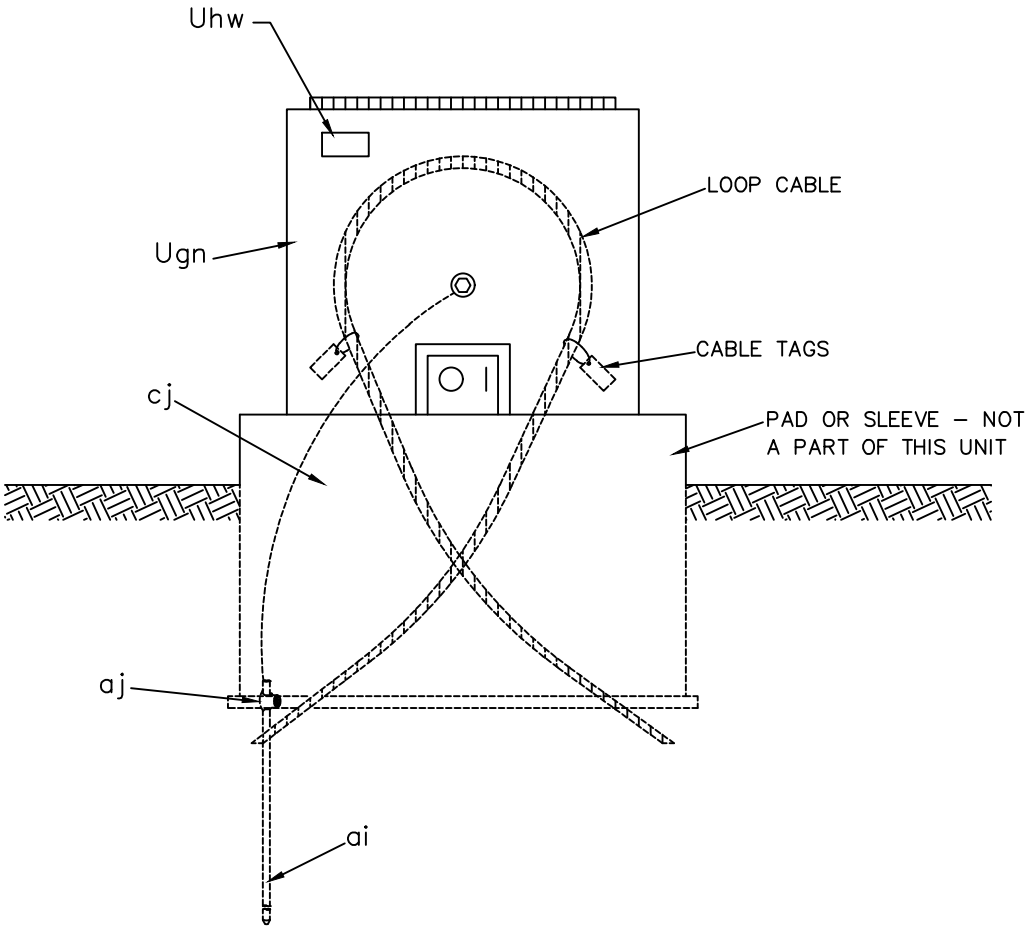

ITEM	QTY.	MATERIAL
ai	1	Ground Rod
aj	1	Clamp, Ground Rod
cj		As Required
Ugn	1	Primary Junction Enclosure
Uhw	2	Safety Signs as Required

NOTES:

1. LOOP CABLE TO PROVIDE SUFFICIENT LENGTH FOR TERMINATING IN A PAD–MOUNTED TRANSFORMER.
2. INSTALL CABLE TAGS ON CABLE.

SINGLE PHASE PADMOUNTED
TRANSFORMER DEFERRED UNIT
PEDESTAL TYPE

AUG 2016		
RUS		US1.DP

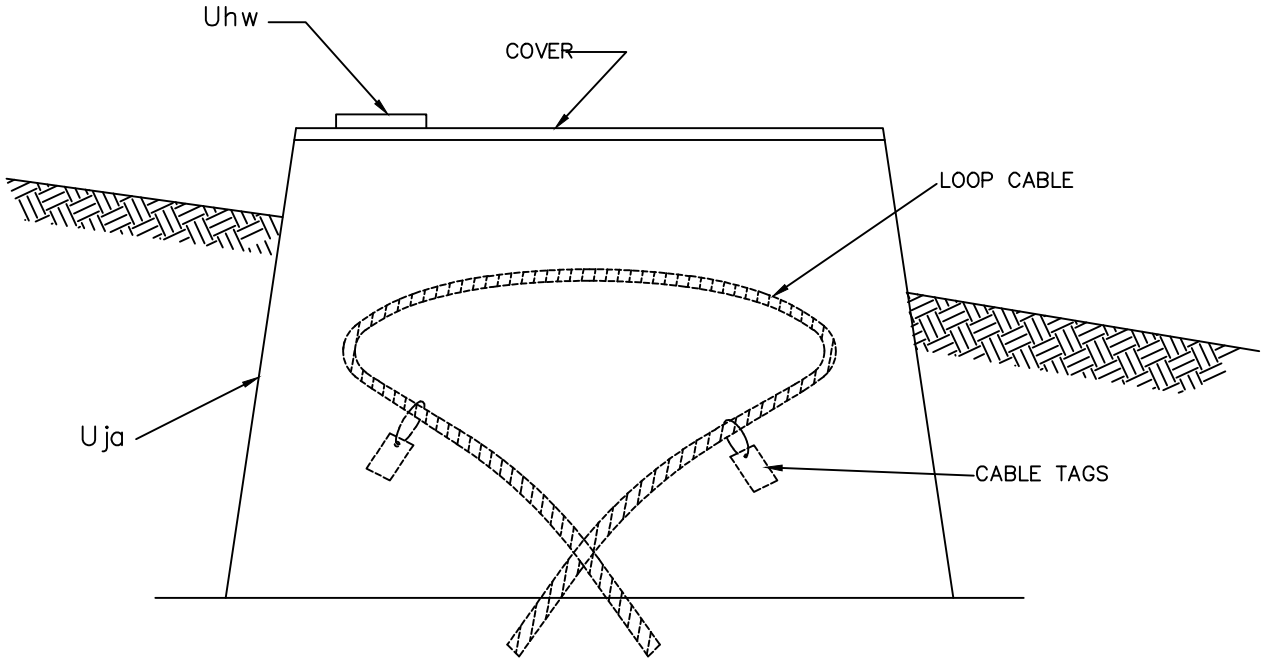

ITEM	QTY.	MATERIAL
Uja	1	Transformer Pad–Sleeve Combination
Uja	1	Cover
Uhw	1	Safety Signs as Required

NOTES:

1. LOOP CABLE TO PROVIDE SUFFICIENT LENGTH FOR TERMINATING IN A LOW PROFILE TRANSFORMER.
2. INSTALL CABLE TAGS ON CABLE.
3. COVER, IF METAL, SHALL BE GROUNDED

SINGLE PHASE PADMOUNTED
TRANSFORMER DEFERRED UNIT
PAD–SLEEVE TYPE

AUG 2016		
RUS		US1.DV

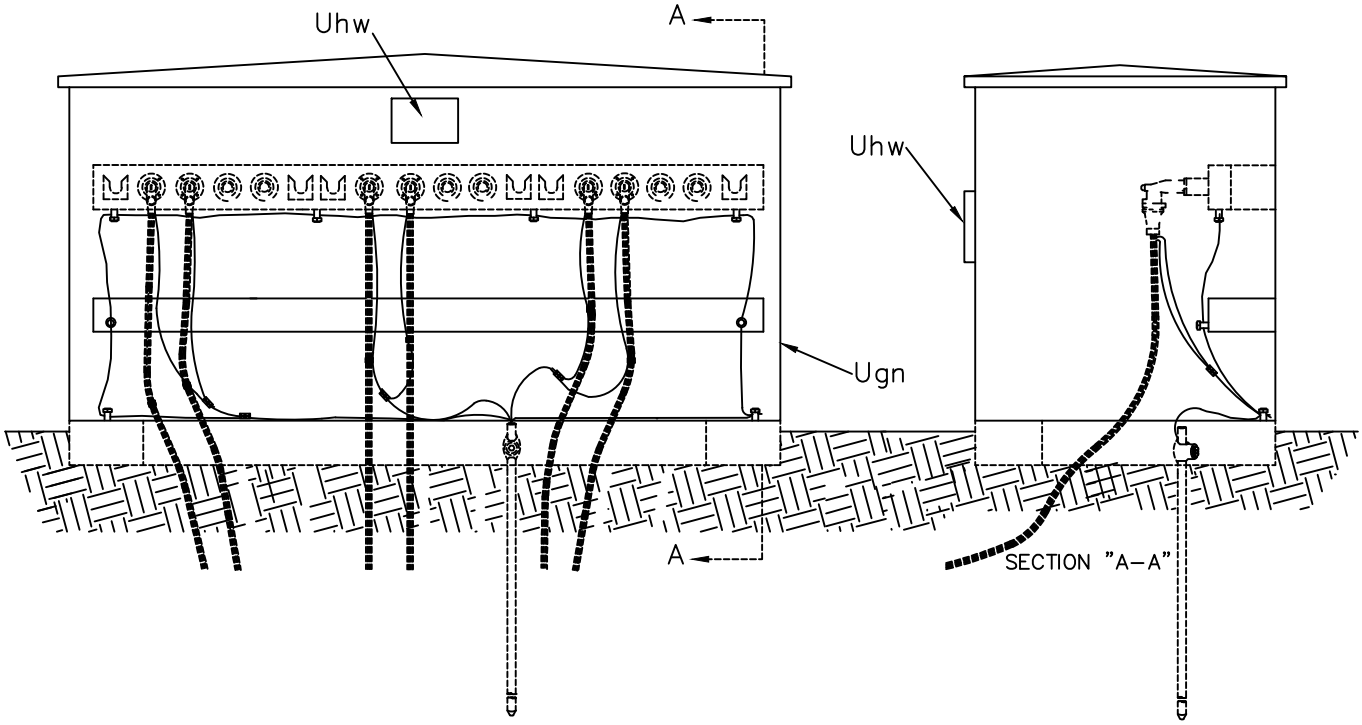

XXUSX.PJ.XXXX

- MODULE DESCRIPTION ONE NUMBER FOR EACH POINT
  - USE "2" FOR 200 AMP LOAD BREAK
  - USE "6" FOR 600 AMP DEAD BREAK
- PRIMARY JUNCTION
- NUMBER OF PHASES
- PRIMARY VOLTAGE (PHASE TO PHASE)

EXAMPLES:

15US1.PJ.2222 = 15kV 1 PHASE ENCLOSURE WITH 4 POINT 200 AMP MODULES.

25US3.PJ.6226 = 25kV 3 PHASE ENCLOSURE WITH 4 POINT MODULES WITH 600 AMP IN AND OUT WITH 200 AMP TAPS.

ITEM	1.PJ	3.PJ	MATERIAL
Ugn	1		Single Phase Enclosure
Ugn		1	Three Phase Enclosure
Uhq	1	3	Module as Defined
Uhw	2	2	Safety Signs as Required

NOTES:

1. SPECIFY FOUNDATION, ARRESTERS, ELBOWS, CAPS AND GROUNDING SEPERATELY

SINGLE AND THREE PHASE
PRIMARY JUNCTIONS

AUG 2016		US1.PJ.
RUS		US3.PJ.

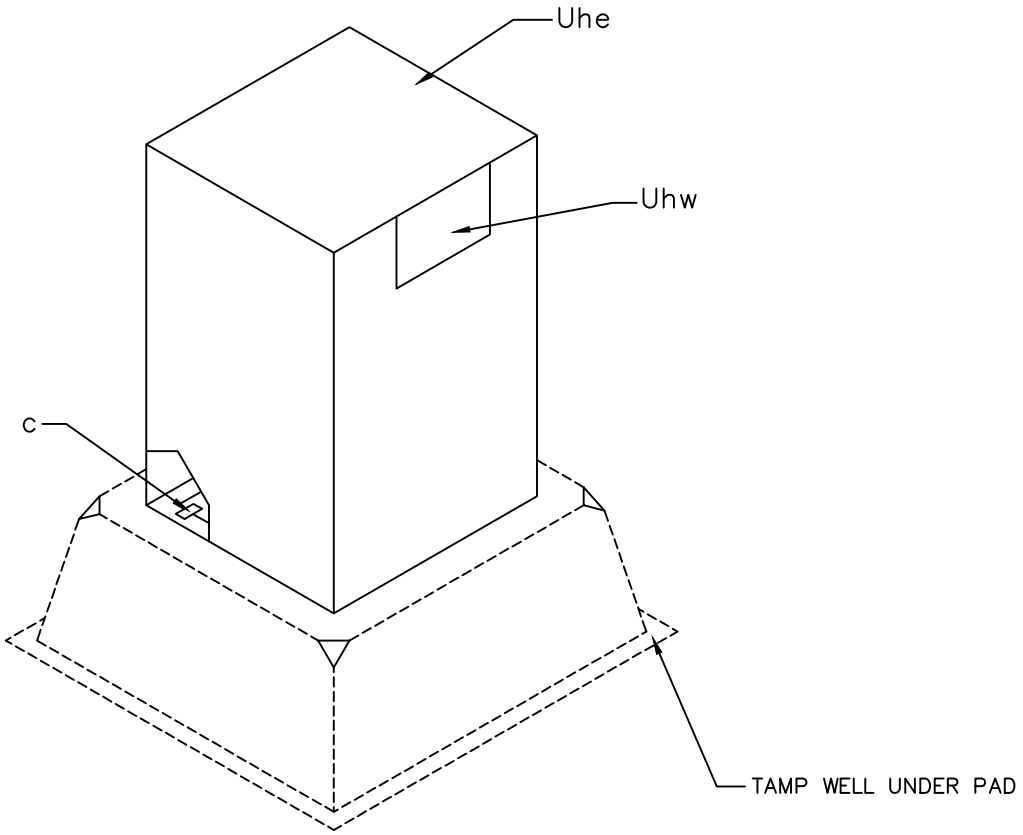

SPECIFICATION NUMBERING CODES:

US.1,2 or 3.SF(FIG. NO.)

- SEE WIRING DIAGRAM FOR FIG. NO.
- NUMBER OF PHASES

EXAMPLE:

US3.SF3E

- FIG. NO. 3E
- SWITCH/FUSE ENCLOSURE
- THREE PHASE CONFIGURATION

NOTES:

1. PAD OR GROUND SLEEVE LOAD BREAK ELBOWS, STRESS CONES, FUSES OR SWITCH BLADES ARE NOT PART OF THIS ASSEMBLY. THEY SHOULD BE SPECIFIED SEPARATELY ON THE STAKING SHEET.
2. TAMP WELL UNDER SLEEVE. LEAVE SLACK COIL OF CABLE IN GROUND SLEEVE.
3. PLACE 6" OF FILL AGAINST INSIDE EDGE OF GROUND SLEEVE.
4. ON DEAD FRONT FUSE ENCLOSURES USE GROUNDING ASSEMBLY TO BE SPECIFIED SEPARATELY.
5. TOP OF GROUND SLEEVE TO BE INSTALLED 3" ABOVE GROUND LEVEL.
6. INSTALL SAFETY SIGN ON EQUIPMENT INSIDE ENCLOSURE AND ALSO INSTALL SAFETY SIGN ON OUTSIDE SURFACE OF ENCLOSURE AS REQUIRED
7. GROUND SLEEVES ARE SPECIFIED.

ITEM	QTY.	MATERIAL
c		Bolt, machine, as required
Uhe	1	Enclosure, as specified
Uhw	2	Safety signs, as required

SWITCH / FUSE
ENCLOSURE INSTALLATION

AUG 2016		
RUS		US_.SF_

FIG. 1A

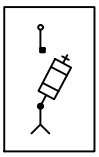

SINGLE PHASE
RADIAL FEED
1 – FUSE

FIG. 1B

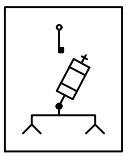

SINGLE PHASE
LOOP FEED
1 – FUSE

FIG. 1C

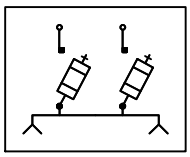

SINGLE PHASE
LOOP FEED
2 – FUSE

FIG. 1D

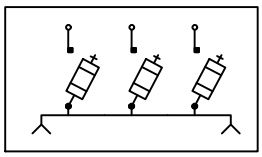

SINGLE PHASE
LOOP FEED
3 – FUSE

FIG. 1E

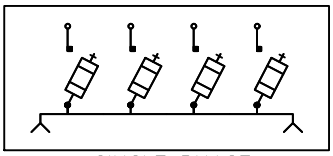

SINGLE PHASE
LOOP FEED
4 – FUSE

FIG. 1F

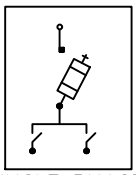

SINGLE PHASE
LOOP FEED
1 – FUSE

FIG. 1G

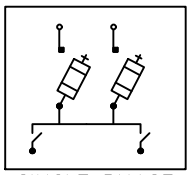

SINGLE PHASE
LOOP FEED
2 – FUSE

FIG. 2A

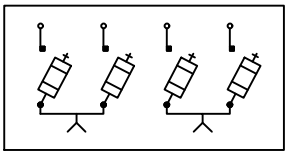

TWO PHASE
RADIAL FEED
2 – FUSE

FIG. 2B

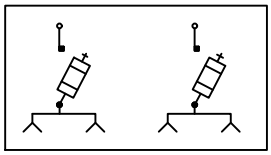

TWO PHASE
LOOP FEED
1 – FUSE

FIG. 2C

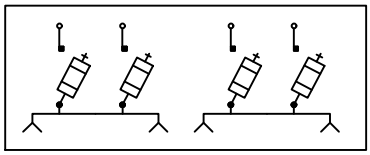

TWO PHASE
LOOP FEED
2 – FUSE

FIG. 2D

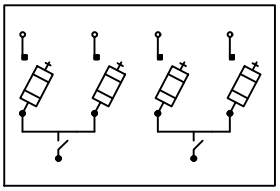

TWO PHASE
RADIAL FEED
2 – FUSE

FIG. 2E

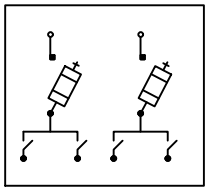

TWO PHASE
RADIAL FEED
1 – FUSE

FIG. 2F

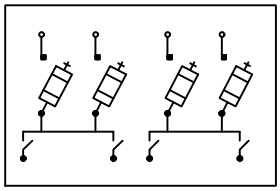

TWO PHASE
LOOP FEED
2 – FUSE

ITEM	QTY.	MATERIAL

NOTES:

—FUSE

• —TERMINATIONS CAN BE WITH ELBOWS, STRESS CONES OR TERMINATORS

^ —LOADBREAK ELBOW LINE SWITCHING

—SINGLE POLE SOLID BLADE SWITCHING

SINGLE POLE SWITCHING 200 AMP FUSE
ENCLOSURE INSTALLATION WIRING DIAGRAMS
(SINGLE PHASE & TWO PHASE)

AUG 2016	1 & 2 – PHASE PRIMARY	US1.SF_
RUS		US2.SF_

FIG. 3B

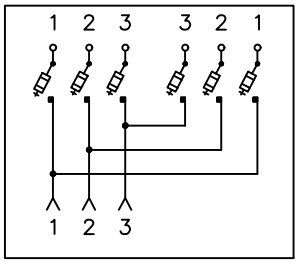

ELBOW SWITCH
2 – FUSE

FIG. 3C

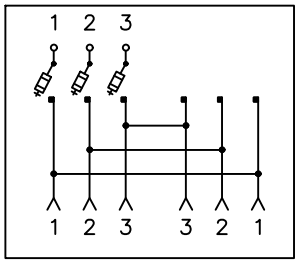

ELBOW SWTCH
1 – FUSE

FIG. 3D

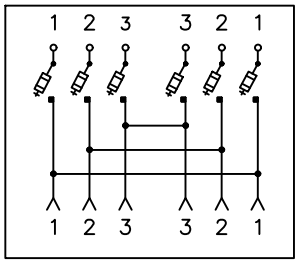

ELBOW SWITCH
2 – FUSE

FIG. 3E

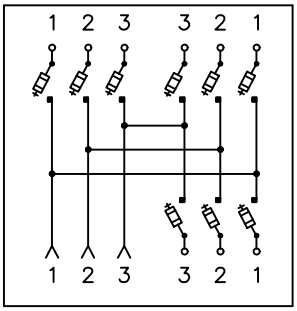

ELBOW SWITCH
3 – FUSE

FIG. 3F

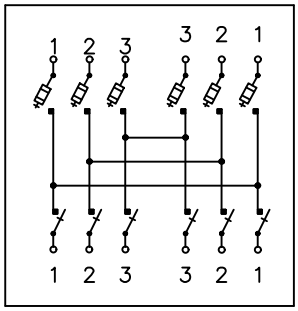

SINGLE POLE SWITCH
2 – FUSE

FIG. 3, 3A

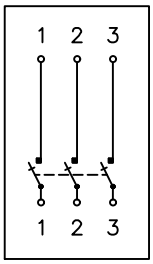

THREE PHASE
SWITCH

FIG. 4, 4A

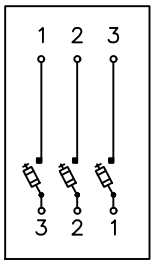

THREE PHASE
SINGLE POLE
SWITCH OR
FUSE

FIG. 5, 5A

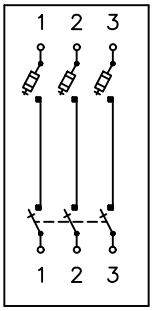

THREE PHASE
SWITCH
1 – FUSE

FIG. 6, 6A

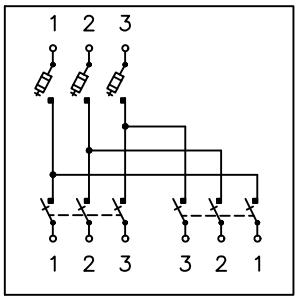

THREE PHASE
SWITCHES
1 – FUSE

FIG. 7, 7A

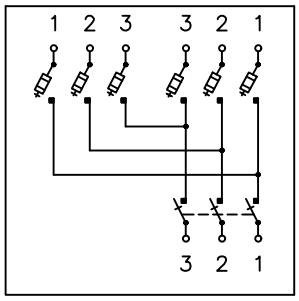

THREE PHASE
SWITCH
2 – FUSE

FIG. 8, 8A

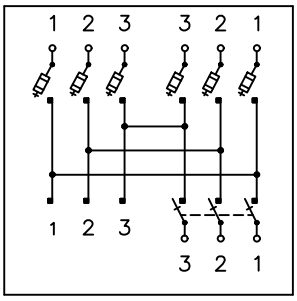

THREE PHASE SWITCH
2 – FUSE
1 – TERMINAL

FIG. 9, 9A

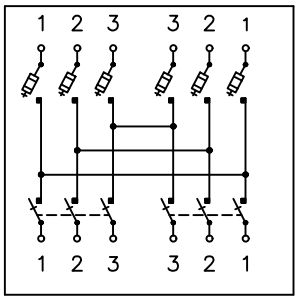

THREE PHASE SWITCHES
2 – FUSES

FIG. 10, 10A

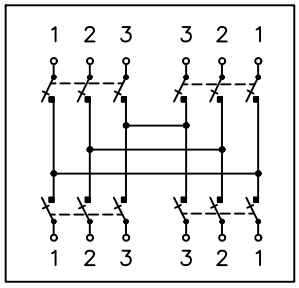

THREE PHASE SWITCHES

FIG. 11, 11A

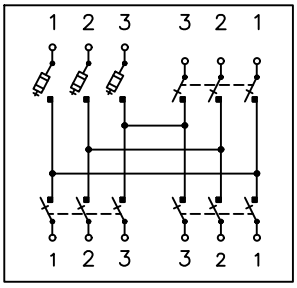

THREE PHASE SWITCHES
1 – FUSE

FIG. 12, 12A

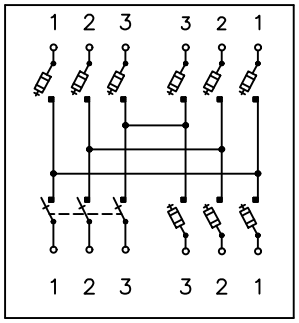

THREE SWITCH
3 – FUSES

FIG. 13, 13A

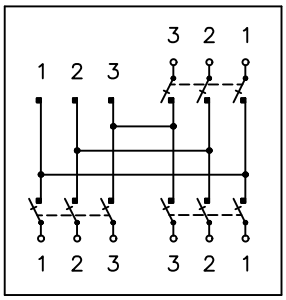

THREE PHASE SWITCHES
1 – TERMINAL

FIG. 14, 14A

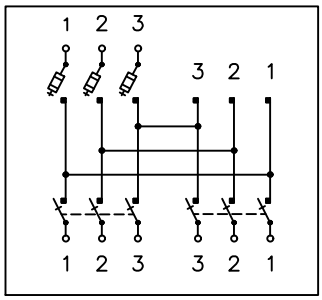

THREE PHASE SWITCHES
1 – FUSE
1 – TERMINAL

FIG. 19, 19A

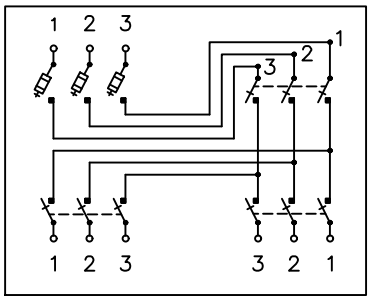

THREE PHASE SWITCHES
THREE PHASE SWITCHED / FUSE TAP

EXAMPLES:

FIG. 3 = 600 AMP MAIN LINE SWITCH
FIG. 3A = 200 AMP MAIN LINE SWITCH

NOTES:

-⊡- – FUSE
• – TERMINATIONS CAN BE WITH ELBOWS STRESS CONES OR TERMINATORS
⋀ – LOADBREAK ELBOW LINE SWITCHING

FUSE ENCLOSURE (200–600 AMP)
WIRING DIAGRAMS
(THREE PHASE)

AUG 2016	3 – PHASE PRIMARY	
RUS		US3.SF_

TRENCH ASSEMBLY UNITS

DRAWING NUMBERS		**DRAWING TITLE (DESCRIPTION)**
1728F-806 (New)	**1728F-806** (Old)	
		TRENCHES FOR CONDUIT AND DIRECT BURIAL CABLES
UT1	(UR2)	TRENCH
UT2		TRENCH WITH CONCRETE ENCASEMENT
UT3		TRENCH WITH CONCRETE CAP
UT4		TRENCH - DIRECTIONAL BORE
UT5		TRENCH - PLOW

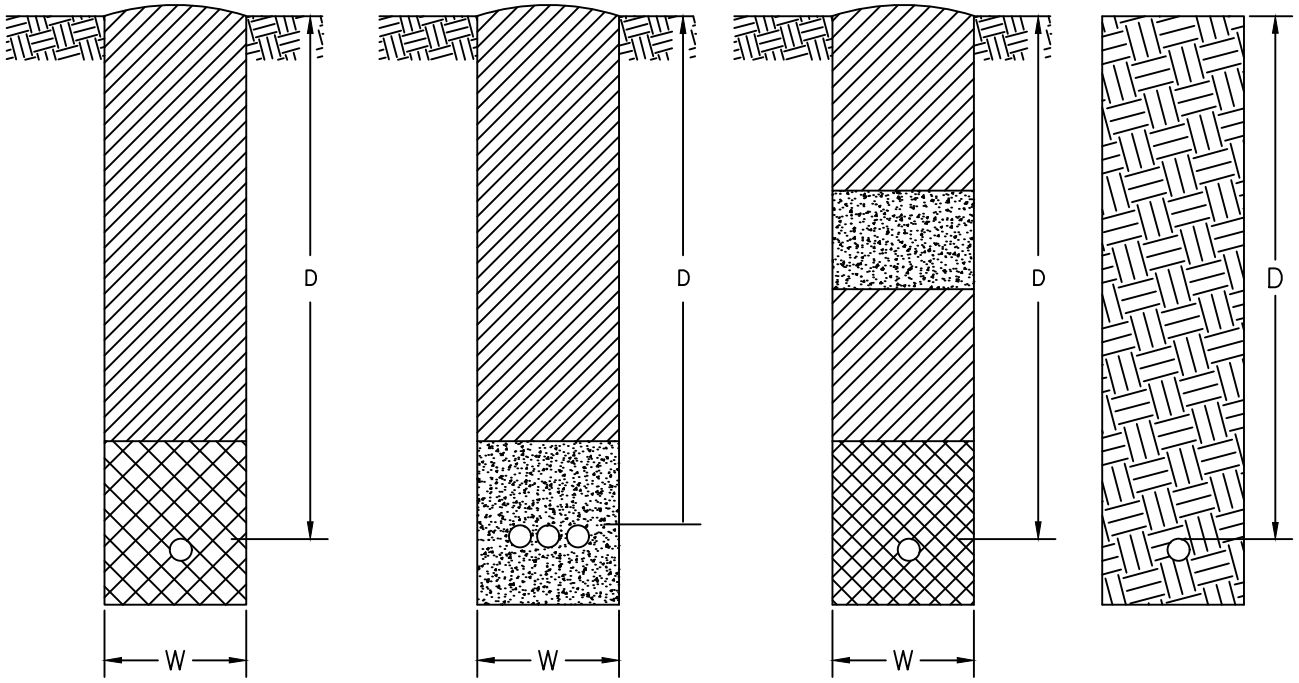

UT1.__.__ UT2.__.__ UT3.__.__ UT4.__

UT5.__

UT_.__.__

- WIDTH
- DEPTH
- 1 TRENCH
  2 TRENCH WITH CONCRETE ENCASEMENT
  3 TRENCH WITH CONCRETE CAP
  4 DIRECTIONAL BORE
  5 PLOW

NOTES:

1. DEPTH AND WIDTH ARE SPECIFIED IN DESCRIPTION OF UNITS.
2. DEPTHS SPECIFIED ARE TO FINISHED GRADE.
3. OVER-EXCAVATE TRENCHES AS NECESSARY TO ALLOW FOR (a) BEDDING, (b) LOOSE, SANDY SOILS, (c) WHERE MORE THAN ONE CABLE WILL BE INSTALLED AND LAYING FIRST CABLE MAY CAUSE TRENCH DAMAGE AND REDUCTION IN DEPTH.
4. BACKFILLING IS PART OF ALL TRENCHING UNITS INCLUDING JOINT-USE TRENCHES UNLESS OTHERWISE SPECIFIED.
5. MAINTAIN 12 INCHES MINIMUM CLEARANCE IN ANY DIRECTION BETWEEN POWER CABLES AND COMMUNICATION CABLES IN JOINT USE TRENCHES.
6. ALL DEPTHS AND CLEARANCES SHALL MEET THE NATIONAL ELECTRICAL SAFETY CODE.

LEGEND

- SAND, GRAVEL OR CLEAN SOIL
- COMPACTED BACKFILL UNLESS OTHERWISE SPECIFIED
- UNDISTURBED EARTH
- CONCRETE

TRENCHES FOR CONDUIT AND DIRECT BURIAL CABLES		
AUG 2016		UT1, UT2
RUS		UT3, UT4, UT5

VOLTAGE CONTROL ASSEMBLY UNITS

DRAWING NUMBERS		**DRAWING TITLE (DESCRIPTION)**
1728F-806 (New)	**1728F-806** (Old)	
UY1.1XX		SINGLE PHASE PADMOUNTED VOLTAGE REGULATOR WITH NO BYPASS SWITCH
UY1.1.XXSW		SINGLE PHASE PADMOUNTED VOLTAGE REGULATOR WITH BYPASS SWITCH
UY3.2L		THREE PHASE PADMOUNTED SHUNT REACTOR WITH LOOP FEED
UY3.3L		THREE PHASE PADMOUNTED CAPACITOR WITH LOOP FEED

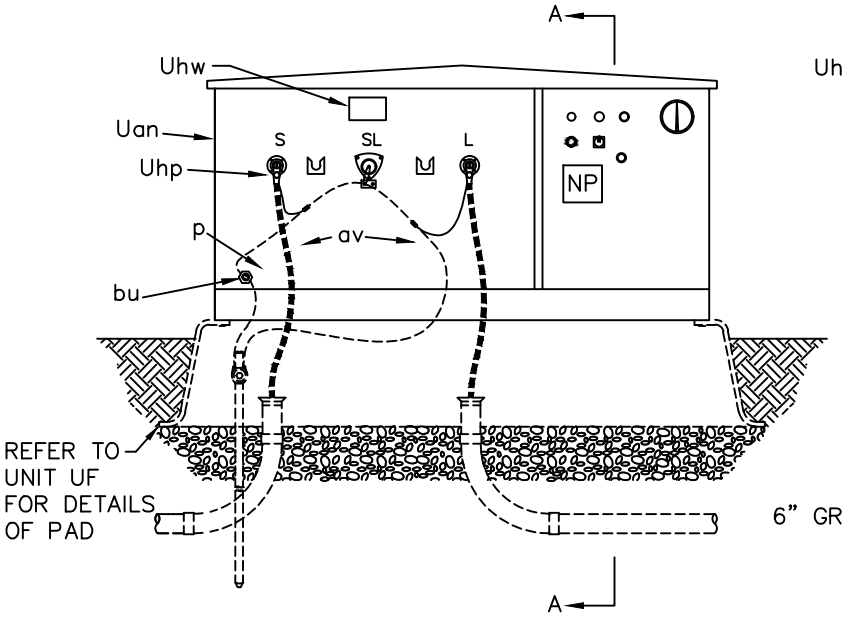

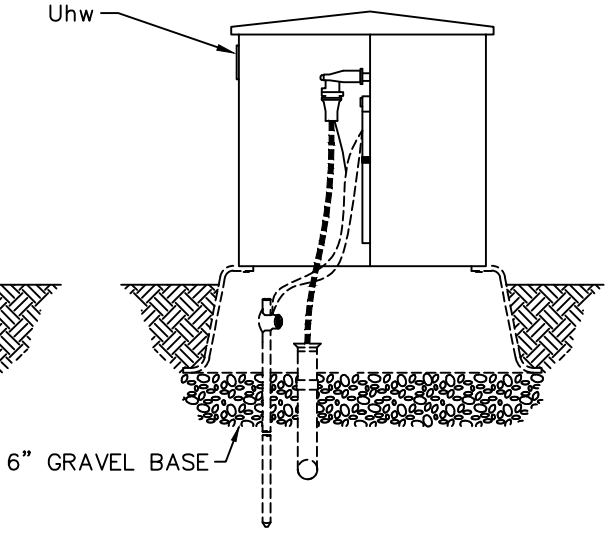

SECTION A–A

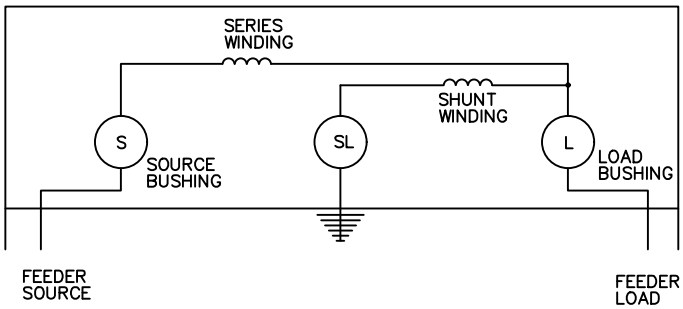

NOTES:

1. PROVIDE SUFFICIENT PRIMARY NEUTRAL PIGTAIL AND CABLE SLACK TO PERMIT READY DISCONNECTION OF ELBOW AND MOUNTING ON PARKING STAND. TRAIN CABLES AS SHOWN.

2. INSTALL WITH UNIT UH1 OR OTHER GROUNDING UNIT.

3. SPECIFY KVA SIZE OF VOLTAGE REGULATOR BEHIND UNIT (XX).

4. SPECIFY PAD OR SLEEVE SEPARATELY.

5. NON–METALLIC SWEEPS SHOULD BE STABILIZED WITH CONCRETE ENCASEMENTS IF PULLING TENSIONS DICTATE.

6. LARGER RADIUS SWEEPS,WHICH MAY BE REQUIRED BY PULLING TENSIONS, MAY INCREASE BURIAL DEPTHS.

ITEM	QTY.	MATERIAL
p		Connector, as required
av		Jumpers, copper as required
bu	1	Connector, equipment ground
Uan	1	Regulator, padmounted
Uhp	2	Termination, elbow
Uhw	2	Sign, Safety

SINGLE PHASE PADMOUNTED
VOLTAGE REGULATOR WITH
NO BYPASS SWITCH

AUG 2016	1 – PHASE PRIMARY	
RUS		UY1.1.XX

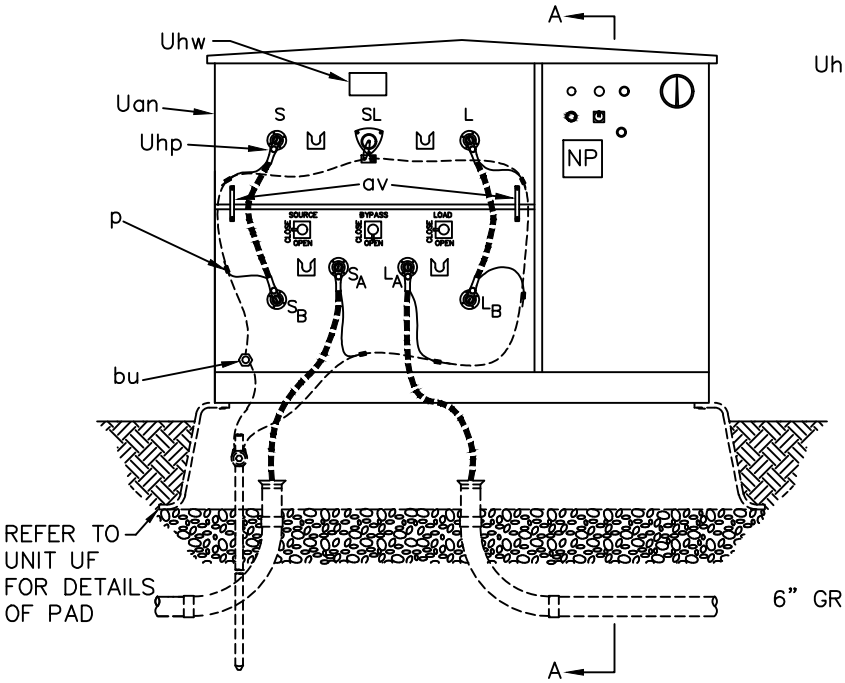

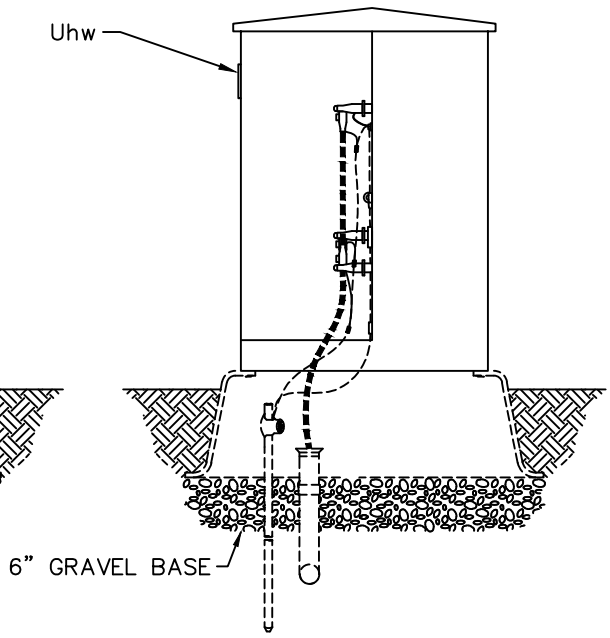

SECTION A–A

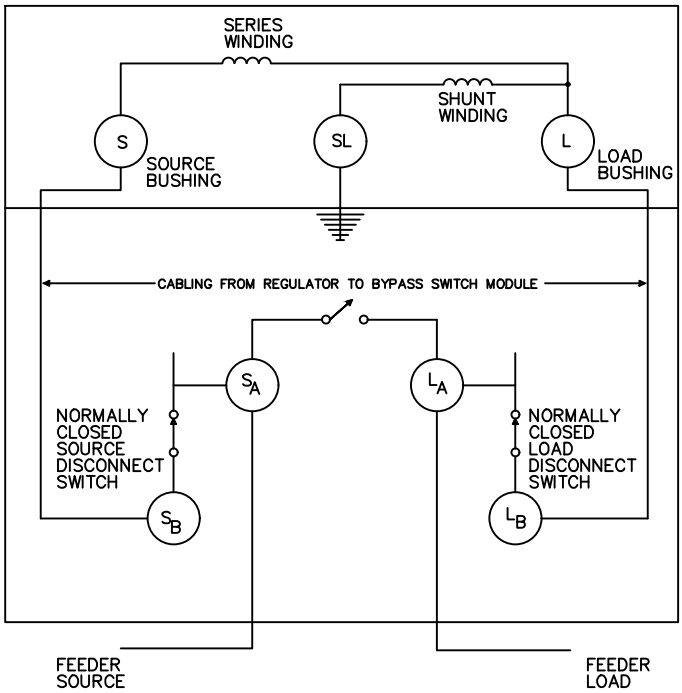

NOTES:

1. PROVIDE SUFFICIENT PRIMARY NEUTRAL PIGTAIL AND CABLE SLACK TO PERMIT READY DISCONNECTION OF ELBOW AND MOUNTING ON PARKING STAND. TRAIN CABLES AS SHOWN.

2. INSTALL WITH UNIT UH1 OR OTHER GROUNDING UNIT.

3. SPECIFY KVA SIZE OF VOLTAGE REGULATOR BEHIND UNIT (XX).

4. SPECIFY PAD OR SLEEVE SEPARATELY.

5. NON–METALLIC SWEEPS SHOULD BE STABILIZED WITH CONCRETE ENCASEMENTS IF PULLING TENSIONS DICTATE.

6. LARGER RADIUS SWEEPS, WHICH MAY BE REQUIRED BY PULLING TENSIONS, MAY INCREASE BURIAL DEPTHS.

ITEM	QTY.	MATERIAL
p		Connector, as required
av		Jumpers, copper as required
bu	1	Connector, equipment ground
Uan	1	Regulator, padmounted
Uhp	6	Termination, elbow
Uhw	2	Sign, Safety

SINGLE PHASE PADMOUNTED
VOLTAGE REGULATOR WITH BYPASS SWITCH

AUG 2016	1 – PHASE PRIMARY	
RUS		UY1.1.XXSW

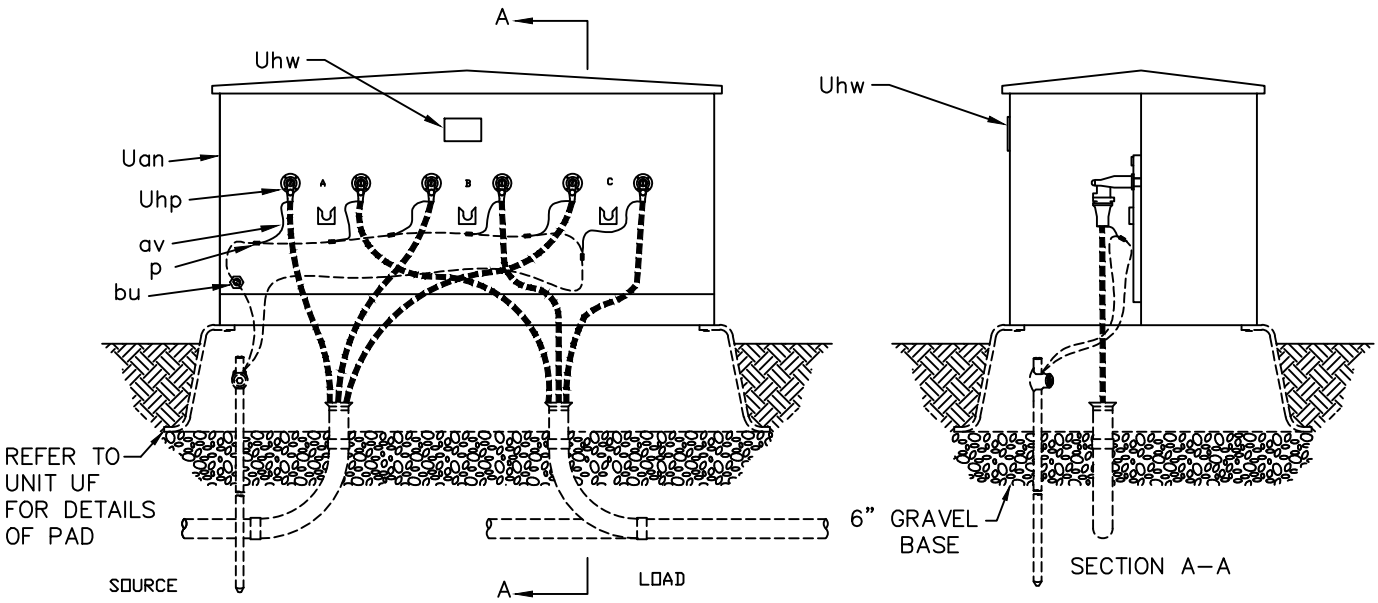

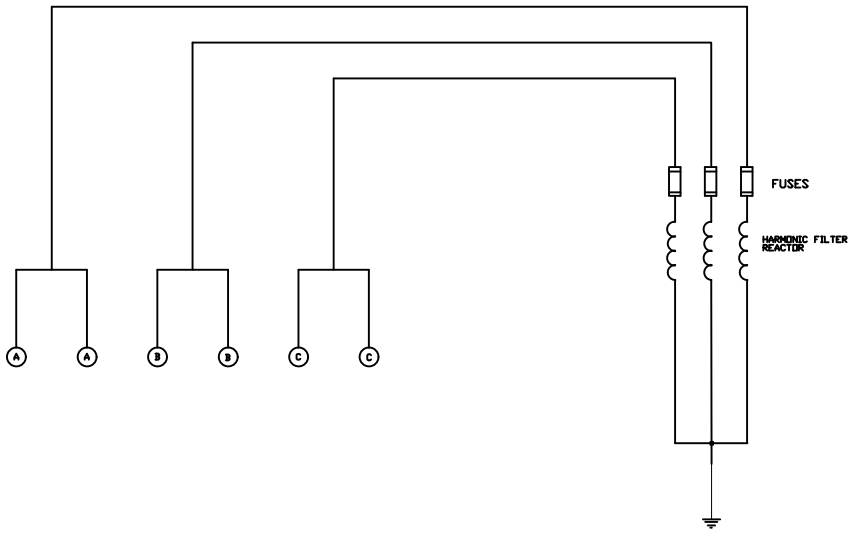

NOTES:

1. PROVIDE SUFFICIENT PRIMARY NEUTRAL PIGTAIL AND CABLE SLACK TO PERMIT READY DISCONNECTION OF ELBOW AND MOUNTING ON PARKING STAND. TRAIN CABLES AS SHOWN.

2. INSTALL WITH UNIT UH1 OR OTHER GROUNDING UNIT.

3. SPECIFY SIZE OF REACTOR.

4. SPECIFY PAD OR SLEEVE SEPARATELY.

5. NON–METALLIC SWEEPS SHOULD BE STABILIZED WITH CONCRETE ENCASEMENTS IF PULLING TENSIONS DICTATE.

6. LARGER RADIUS SWEEPS,WHICH MAY BE REQUIRED BY PULLING TENSIONS, MAY INCREASE BURIAL DEPTHS.

ITEM	QTY.	MATERIAL
p		Connector, as required
av		Jumpers, copper as required
bu	1	Connector, equipment ground
Uan	1	Capacitor bank, padmounted, loop feed
Uhp	6	Termination, elbow
Uhw	2	Sign, Safety

THREE PHASE PADMOUNTED
SHUNT REACTOR WITH LOOP FEED

AUG 2016	3 – PHASE PRIMARY	
RUS		UY3.2L

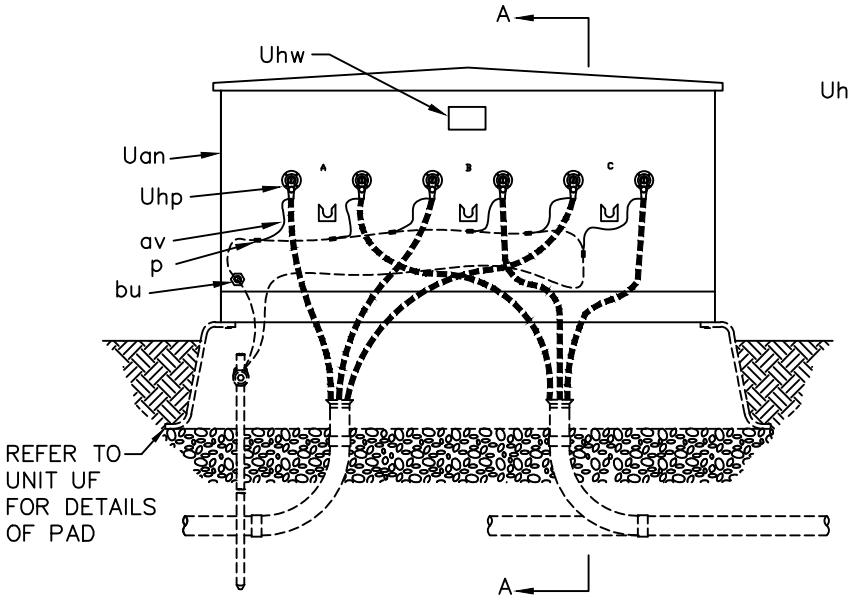

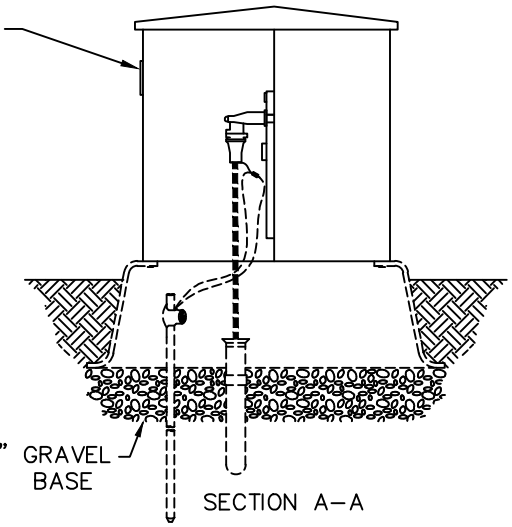

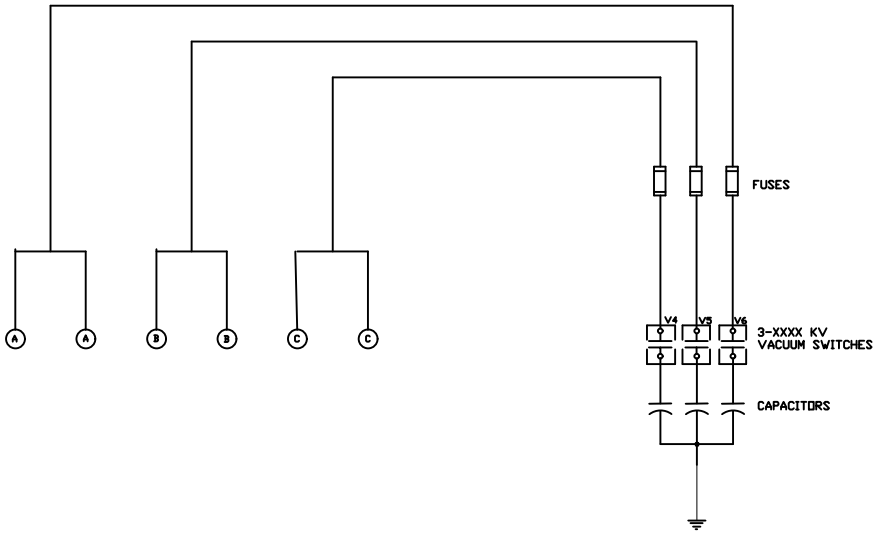

NOTES:

1. PROVIDE SUFFICIENT PRIMARY NEUTRAL PIGTAIL AND CABLE SLACK TO PERMIT READY DISCONNECTION OF ELBOW AND MOUNTING ON PARKING STAND. TRAIN CABLES AS SHOWN.

2. INSTALL WITH UNIT UH1 OR OTHER GROUNDING UNIT.

3. SPECIFY KVAR SIZE OF CAPACITOR.

4. SPECIFY PAD OR SLEEVE SEPARATELY.

5. NON–METALLIC SWEEPS SHOULD BE STABILIZED WITH CONCRETE ENCASEMENTS IF PULLING TENSIONS DICTATE.

6. LARGER RADIUS SWEEPS, WHICH MAY BE REQUIRED BY PULLING TENSIONS, MAY INCREASE BURIAL DEPTHS.

ITEM	QTY.	MATERIAL
p		Connector, as required
av		Jumpers, copper as required
bu	1	Connector, equipment ground
Uan	1	Capacitor bank, padmounted, loop feed
Uhp	6	Termination, elbow
Uhw	2	Sign, Safety

THREE PHASE PADMOUNTED
CAPACITOR WITH LOOP FEED

AUG 2016	3 – PHASE PRIMARY	
RUS		UY3.3L

Disposition of Assemblies in Bulletin D-806

Old Assembly Number (June 2000 1728F-806)	**New Assembly Number** (1728F-806)	**Material Changes and Comments**
UA1	UA1	Removed cable riser shield and separated into new UP unit
UA2	UA2	Removed cable riser shield and separated into new UP unit
UA3	UA3	Removed cable riser shield and separated into new UP unit
UB1	UB1	Removed cable riser shield and separated into new UP unit
UB2	UB2	Removed cable riser shield and separated into new UP unit
UB3	UB3	Removed cable riser shield and separated into new UP unit
UB4	UB4	Removed cable riser shield and separated into new UP unit
UC1	UC1	Removed cable riser shield and separated into new UP unit
UC2	UC2	Removed cable riser shield and separated into new UP unit
UC2-1	UC6	Removed cable riser shield and separated into new UP unit
UC2-2	UC6	Removed cable riser shield and separated into new UP unit
UC5-1	UC7.2	Combined deadend and tangent terminal pole units
UC6-1	UC7.2	Combined deadend and tangent terminal pole units
UG6	UG1.1	Add elbow, bushing arrester, and secondary connector blocks
UG7	UG1.3	Add elbows and secondary connector blocks
UG17	UG3.1	Add elbows, bushing arresters, and secondary connector blocks
UG17-2	UG3.3	Add elbows, elbow arresters, and secondary connector blocks
UG17-3	UG3.2	Add elbow arresters and secondary connector blocks
UJ1	UJ1	No Material Changes - Separated Drawings
UJ2	UJ2	No Material Changes - Separated Drawings
UK5	UJ3.1	No material changes
UK6	UJ4.1	No material changes
UM1-5C	UF1.PC	No material changes
UM1-5NC	UF1.PN	No material changes
UM1-6C	UF3.PC	No material changes
UM1-7C	UF1.BC	No material changes
UM1-7NC	UF1.BN	No material changes
UM3-14	US1.PJ	No material changes
UM3-44		Discontinued
UM3-45		Discontinued
UM3-46		Discontinued
UM3E-_-_	US_.SF_	No material changes
UM3E-1	US1.SF_	No material changes
UM3E-2	US2.SF_	No material changes
UM3E-3	US3.SF_	No material changes
UM5	UK1.1	Removed cable riser shield and separated into new UP unit
UM5-6		Discontinued
UM5-6A		Discontinued

Disposition of Assemblies in Bulletin D-806

Old Assembly Number (June 2000 1728F-806)	**New Assembly Number** (1728F-806)	**Material Changes and Comments**
UM6-1	UM6.EL2	No Material Changes
UM6-2	UM6.EL2F	No Material Changes
UM6-3	UM6.EL6/9	No Material Changes
UM6-4	UM6.FI	No Material Changes
UM6-5	UM6.IN22	No Material Changes
UM6-6	UH1.01	No material changes
UM6-7	UM6.PL2	No Material Changes
UM6-8	UP7.01	No material changes
UM6-9	UP7.03	No material changes
UM6-10	UM6.C2	No Material Changes
UM6-11	UM6.C6	No Material Changes
UM6-12	UM2	No Material Changes
UM6-13	UM6.IN2	No Material Changes
UM6-14	UM6.IN6	No Material Changes
UM6-15	UM6.PK2	No Material Changes
UM6-17	UM6.PL6	No Material Changes
UM6-18	UP7.02	No material changes
UM6-19	UM6.PK22	No Material Changes
UM6-20	UN6.JN22	No Material Changes
UM6-21	UM6.JN222	No Material Changes
UM6-22	UM6.JN2222	No Material Changes
UM6-24	UM6.T	No Material Changes
UM6-26	UM6.TS	No Material Changes
UM6-28	UM6.SP	No Material Changes
UM6-32	UJ1.01	No Materal Change
UM6-33	UP1	No Materal Change
UM6-34	UP2	No Materal Change
UM6-35		Discontinued, refer to Overhead Specifications
UM6-36		Discontinued, refer to Overhead Specifications
UM6-37	UP4	No Materal Change
UM6-38	UP3	No Materal Change
UM6-39	UH4.1G	Modified guide drawing; no material
UM7-1		Discontinued
UM8	UQ_._B_	No Materal Change
UM8-2	UQ_._S_	No Materal Change
UM8-3	UQ_._P_	No Materal Change
UM8-3A	UQ_._P_	No Materal Change
UM8-4	UQ_._T_	No Materal Change

Disposition of Assemblies in Bulletin D-806

Old Assembly Number (June 2000 1728F-806)	**New Assembly Number** (1728F-806)	**Material Changes and Comments**
UM8-4A	UQ_._T_	No Materal Change
UM8-5		Discontinued
UM8-6		Discontinued
UM8-7		Discontinued
UM9-2		Discontinued
UM12		Discontinued, combined with UM2
UM27-1	UP5.2	No material changes
UM27-2	UP5.3	No material changes
UM27-3	UP5.4	No material changes
UM28	UP5.1	No material changes
UM33	US3.PJ	Add junction modules
UM48-1	UH1.1	No material changes
UM48-2	UH1.2	No material changes
UM48-3		Discontinued
UM48-4		Discontinued
UM48-5	UH1.4	No material changes
UM48-6	UH1.7	No material changes
UR2	UT1-UT5	Modified trenching drawing, refer to UT1 - UT5
UR2-1	UT1-UT5	Modified trenching drawing, refer to UT1 - UT5
UR2-2	UT1-UT5	Modified trenching drawing, refer to UT1 - UT5
UR2-3	UT1-UT5	Modified trenching drawing, refer to UT1 - UT5
UR2-4	UT1-UT5	Modified trenching drawing, refer to UT1 - UT5
UR2-5	UT1-UT5	Modified trenching drawing, refer to UT1 - UT5
UR2-NT	UT1-UT5	Modified trenching drawing, refer to UT1 - UT5
UR2-ST	UT1-UT5	Modified trenching drawing, refer to UT1 - UT5
UX1	UG2.1	Add elbows, elbow arresters, and secondary connector blocks
UX2	US1.DP	No material changes
UX3	US1.DV	No material changes
UX4	UH4.1	Modified guide drawing; added material
UX5	UH3.1	Modified guide drawing; added material
UX7		Discontinued
UX8	UK3.1	No material changes
UX11	UA.G	Arrester connection guide drawing

Bulletin 1728F-806: New Assemblies and Guide Drawings

NUMBER	ASSEMBLY / GUIDE DRAWING DESCRIPTION
NEW SINGLE PHASE RISER POLE ASSEMBLY UNITS	
UA4	SINGLE PHASE CABLE TERMINAL POLE WITHOUT CUTOUT
UA.G	CABLE TERMINAL POLE ARRESTER CONNECTION GUIDE
UA1.USG	UNDERGROUND SOURCE CONNECTION GUIDE
NEW TWO PHASE RISER POLE ASSEMBLY UNITS	
UB5	TWO PHASE CABLE TERMINAL POLE WITH UPPER CROSSARM MOUNTING CUTOUTS AND CROSSARM MOUNTING ARRESTERS
UB6	TWO PHASE CABLE TERMINAL POLE WITH UPPER CROSSARM MOUNTING CUTOUTS AND BRACKET MOUNTING ARRESTERS
NEW THREE PHASE RISER POLE ASSEMBLY UNITS	
UC3	THREE PHASE TERMINAL POLE WITHOUT CUTOUTS AND CROSSARM MOUNTING ARRESTERS
UC4	THREE PHASE TERMINAL POLE WITHOUT CUTOUTS AND BRACKET MOUNTING ARRESTERS
UC5	THREE PHASE TERMINAL POLE WITH UPPER CROSSARM MOUNTING CUTOUTS AND CROSSARM MOUNTING ARRESTERS
UC7.1	BRACKET MOUNTED SWITCHES
UC7.3	VERTICAL SWITCHES MOUNTED ON THREE CROSSARMS
UC7.4	VERTICAL SWITCHES MOUNTED ON FOUR CROSSARMS
UC8.1	THREE PHASE CABLE TERMINAL POLE WITH VERTICAL FRAMING AND TWO BRACKETS PER PHASE
UC8.2	THREE PHASE CABLE TERMINAL POLE WITH VERTICAL FRAMING AND ONE BRACKET PER PHASE
NEW FOUNDATION ASSEMBLY UNITS	
UF.PBC	CONCRETE PRIMARY PULL BOX
UF.PBN	NON-CONCRETE PRIMARY PULL BOX
UF3.BC	CONCRETE BOX PAD FOR THREE PHASE EQUIPMENT
UF3.BN	NON-CONCRETE BOX PAD FOR THREE PHASE EQUIPMENT
UF3.PN	NON-CONCRETE PAD FOR THREE PHASE EQUIPMENT
UF3.VC	CONCRETE VAULT FOR THREE PHASE EQUIPMENT
NEW TRANSFORMER ASSEMBLY UNITS	
UG1.01	SINGLE PHASE ONE BUSHING PADMOUNTED TRANSFORMER ONLY
UG1.02	SINGLE PHASE TWO BUSHING PADMOUNTED TRANSFORMER ONLY
UG1.2	SINGLE PHASE TWO BUSHING PADMOUNTED TRANSFORMER - RADIAL FEED
UG3.01	THREE PHASE THREE BUSHING PADMOUNTED TRANSFORMER ONLY
UG3.02	THREE PHASE SIX BUSHING PADMOUNTED TRANSFORMER ONLY

Bulletin 1728F-806: New Assemblies and Guide Drawings

NUMBER	ASSEMBLY / GUIDE DRAWING DESCRIPTION
NEW GROUNDING ASSEMBLY UNITS	
UH2.0	COUNTERPOISE GROUNDING
UH2.2	COUNTERPOISE GROUNDING
UH2.7	TRENCH TYPE GROUNDING ASSEMBLY - RISER TO TRANSFORMER OUTSIDE OF CONDUIT
UH4.1G	JACKETED CABLE GROUNDING INSTALLATION (HEAT SHRINK OR COLD SHRINK)
NEW SECONDARY ASSEMBLY UNITS	
UJ3.3	SECONDARY PEDESTAL THREE PHASE UNDERGROUND CABLE
UJ4.3	SECONDARY HANDHOLE THREE PHASE UNDERGROUND CABLE
NEW SERVICE ASSEMBLY UNITS	
UK2.1	SECONDARY RISER BOTTOM CONNECTION
UK2.2	SECONDARY RISER BOTTOM SIDE CONNECTION
UK4	SECONDARY BREAKER
NEW MISCELLANEOUS ASSEMBLY UNITS	
UM1.XX	RIGHT-OF-WAY CLEARING
UM3	SAFETY SIGNS
UM6.JN6226	FOUR POINT TERMINATION, 2-600 AMP DEAD BREAK AND 2-200 AMP LOAD BREAK
UM6.PKGD	ONE POINT GROUND
UM6.RK	HEAT SHRINK OR COLD SHRINK TUBING
NEW OUTDOOR LIGHTING ASSEMBLY UNITS	
UO1	OUTDOOR LIGHT INSTALLATION GUIDE
UO2	LIGHT STRUCTURE INSTALLATION GUIDE
NEW SYSTEM PROTECTION ASSEMBLY UNITS	
UP7.04	CONDUIT ELBOW
UP7.B1	SINGLE CONDUIT RISER WITH STAND-OFF BRACKETS
UP7.B2	TWO CONDUIT RISER WITH STAND-OFF BRACKETS
UP7.B3	THREE CONDUIT RISER WITH STAND-OFF BRACKETS
UP7.C	STRAP ATTACHED CONDUIT RISER
UP7.FC	FLEX CONDUIT RISER
UP7.UG	U-GUARD RISER
UP8	UNDERGROUND CONDUIT
NEW METERING ASSEMBLY UNITS	
UQG	METER OPTIONS GUIDE
NEW RECLOSER ASSEMBLY UNITS	
UR3.--	THREE PHASE PADMOUNTED RECLOSER

Bulletin 1728F-806: New Assemblies and Guide Drawings

NUMBER	ASSEMBLY / GUIDE DRAWING DESCRIPTION
NEW SECTIONALIZING ASSEMBLY UNITS	
US1.DC	SINGLE PHASE PADMOUNTED TRANSFORMER DEFERRED UNIT - CABINET TYPE
NEW TRENCH ASSEMBLY UNITS	
UT2	TRENCH WITH CONCRETE ENCASEMENT
UT3	TRENCH WITH CONCRETE CAP
UT4	TRENCH - DIRECTIONAL BORE
UT5	TRENCH - PLOW
NEW VOLTAGE CONTROL ASSEMBLY UNITS	
UY1.1XX	SINGLE PHASE PADMOUNTED VOLTAGE REGULATOR WITH NO BYPASS SWITCH
UY1.1.XXSW	SINGLE PHASE PADMOUNTED VOLTAGE REGULATORS WITH BYPASS SWITCH
UY3.2L	THREE PHASE PADMOUNTED SHUNT REACTOR WITH LOOP FEED
UY3.3L	THREE PHASE PADMOUNTED CAPACITOR WITH LOOP FEED

Attachment C

RUS Standard Format and Meaning of Underground Distribution Assembly Numbers

The RUS standard numbering format for underground distribution assemblies is: **$UL_1N_1.LN_2$**

L_1 is an alphabetic character that represents the *category* or group of similar assemblies that fulfill a similar and specific function in the construction or operation of an underground distribution line. For example, the assemblies in category "C" are pole top riser assemblies that support three primary cables, terminations, arresters and cutouts/switches.

The following table shows the 16 distribution assembly categories and the letter (UL_1) RUS has assigned to represent them.

DESIGNATED MEANINGS of ASSEMBLY CATEGORY NUMBERS (UL_1)		
UA 1-Phase, pole-top riser **UB** 2-Phase, pole-top riser **UC** 3-Phase, pole-top riser **UF** Foundations **UG** Transformers	**UH** Grounds **UJ** Secondaries **UK** Services **UM** Miscellaneous **UO** Outdoor Lighting **UP** Protection	**UQ** Metering **UR** Reclosers **US** Sectionalizing **UT** Trench **UY** Volt. Alteration Equip.

N_1 is a numeric character that represents a *subcategory* or group of similar assemblies within a category. The different assemblies in a subcategory all fulfill the same specific functional purpose, but their function is somewhat different than the other assemblies within their associated assembly category (UL_1). It may represent selected material and arrangement to accomplish the function or it could represent the number of phases involved to accomplish a similar purpose.

The following table shows the RUS designated meaning of the numbers (N_1) that represent the pole-top riser assembly category "A".

DESIGNATED MEANINGS of SUBCATEGORY NUMBERS (N_1) for POLE TOP RISER ASSEMBLIES
1 Single phase cable terminal pole top with two brackets
2 Single phase cable terminal pole top with one bracket
3 Single phase cable terminal pole top with crossarm mounted cutout
4 Single phase cable terminal pole top without cutout

RUS has assigned meanings to the subcategory numbers (N_1) for the remaining 15 (UL_1) categories of underground distribution assemblies, however, the list and meanings of these numbers is long and varied and beyond the scope of this summary exhibit. The index for each section in this bulletin defines the assembly unit for each Construction Assembly Unit.

LN_2, which is either one or two letters or numbers, is defined as the *assembly identification*. This identification is used to differentiate the similar assemblies in a subcategory (N_1) of assemblies. The assigned meanings to assembly identification vary between categories. The use between categories is explained in the Subcategory index.

For example, in underground there are several parts that are used to connect many different pieces of padmounted equipment under several categories. These are grouped under miscellaneous UM6 with letters identifying the type of device and suffixes indicating the number, size and type of interface.

DESIGNATED MEANINGS of ASSEMBLY IDENTIFICATION NUMBERS (N_2) for MISCELLANEOUS ASSEMBLIES (UM6)	
C Cap	**PK** Parking Stand
EL Elbow	**PL** Plug
FI Fault Indicator	**T** Terminator
IN Insert	**SP** Splice
JN Junction Module	**RK** Reseal Kit

The *prefix* "25" in front of a standard assembly number indicates that the assembly is used for 24.9/14.4 kV underground construction. A standard assembly number with prefix "15" indicates that the assembly is used for 12.47/7.2 kV underground construction.

A *suffix* is an alphabetic character or number placed at the end of a standard assembly number. A suffix describes the type of the assembly. The following are some typical suffixes.

G (Guide drawing, not an assembly) **2** 200 Amp Load Break

C (Concrete)	**6** 600 Amp Dead Break
N (Non Concrete)	**9** 900 Amp Dead Break

Not all assembly numbers have suffixes and some may have more than one suffix number or letter.

SUMMARY

Each unit will use the same format. The VOLTAGE PREFIX, when required is followed by the ASSEMBLY CATEGORY, a two-letter designation UA through UY which represent single phase primary units through voltage control units. Sometimes numbers complete the assembly category. After the assembly category a DOT (.) is inserted before the ASSEMBLY IDENTIFICATION. The assembly identification uses both numbers and letters to identity a unit within the category. Note subunits use a zero before the number and represents parts for a larger unit. Sometimes a SUFFIX DESIGNATION is required to provide further clarification.